TECHNICAL DRAWING

COLLECTION: Té
PRODUCT CODE: WG-TEBOX149/B-1/2-CP

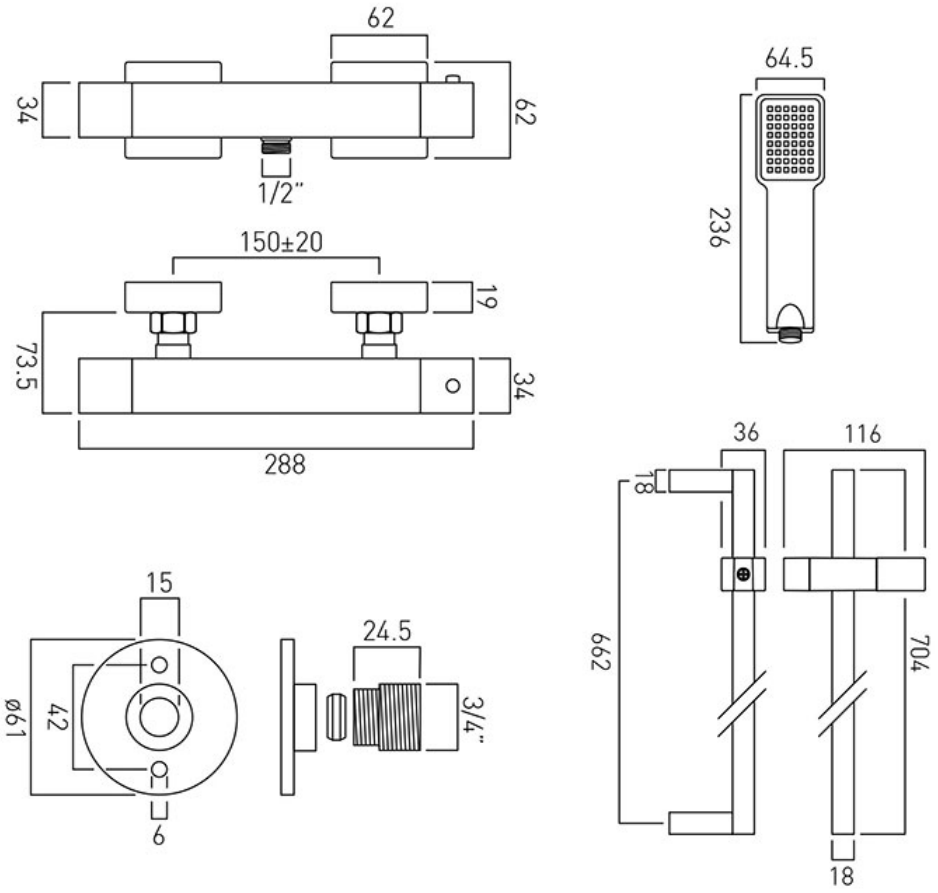

tel: 01934 744466
email: sales@vado.com
www.vado.com

where inspiration flows
taps | showering | accessories

VADO