TRITON

AIRE
Thermostatic bath shower mixer

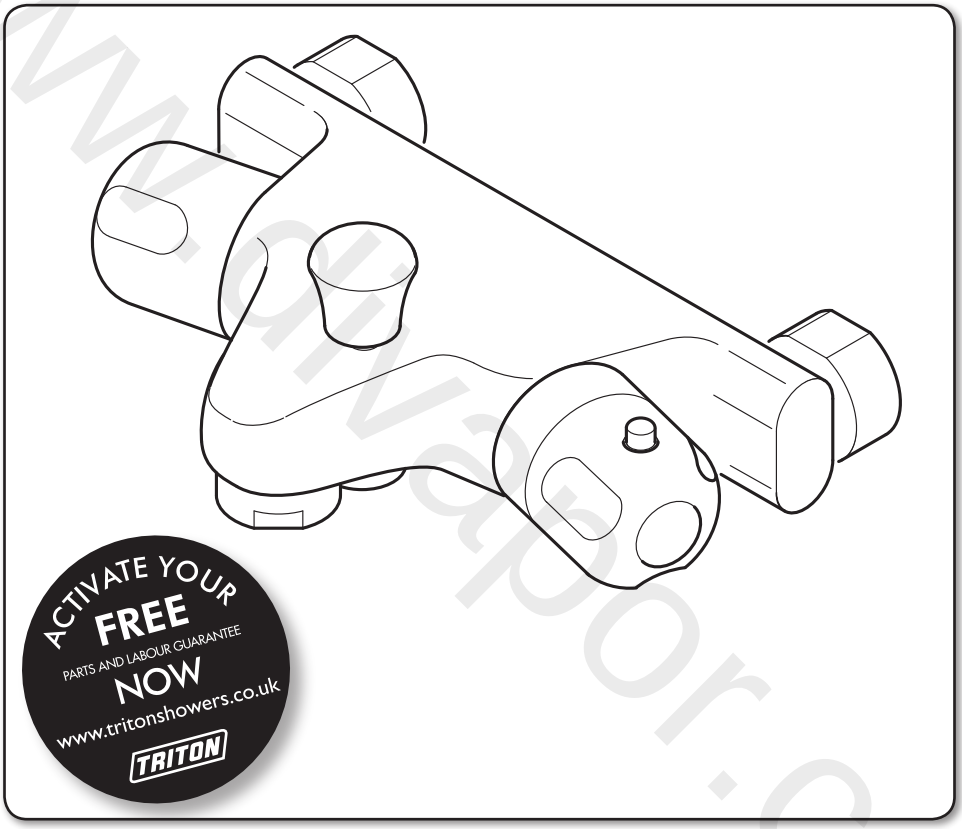

Installation and operating instructions

INSTALLERS PLEASE NOTE THESE INSTRUCTIONS ARE TO BE LEFT WITH THE USER

2180427K - February 2013

www.airvapor.com

CONTENTS Page

Main components 1
Introduction ..... 2 -3
Typical domestic installations ..... 4 - 6
Preparing the mixer valve 7
Siting of the shower 7
Supply pipework 7
Bath pillar fittings *(supplied)* 8
Variable fittings *(optional)* 8
Making good 9
Fitting the mixer 9
Flow regulation 9
To fit the flow regulator 9
Leak testing 9
Commissioning 9
Temperature adjustment range 10
Adjusting the maximum temperature setting 10
Operating the bath shower mixer 11
Using the shower setting 11
Fitting the showerhead holder *(if supplied)* 11
Dimensions 12
Bar mixer fittings *(optional)* 13
Spare parts 14
Maintenance 15
Fault Finding ..... 16 - 17
Guarantee, service policy, etc. ..... rear cover

To check the product suitability for commercial and multiple installations, please contact Triton's specification advisory service before installation.

Telephone: 0870 067 3767
Facsimile: 0870 067 3334
E mail: technical@tritonshowers.co.uk

www.plumbapor.com

MAIN COMPONENTS

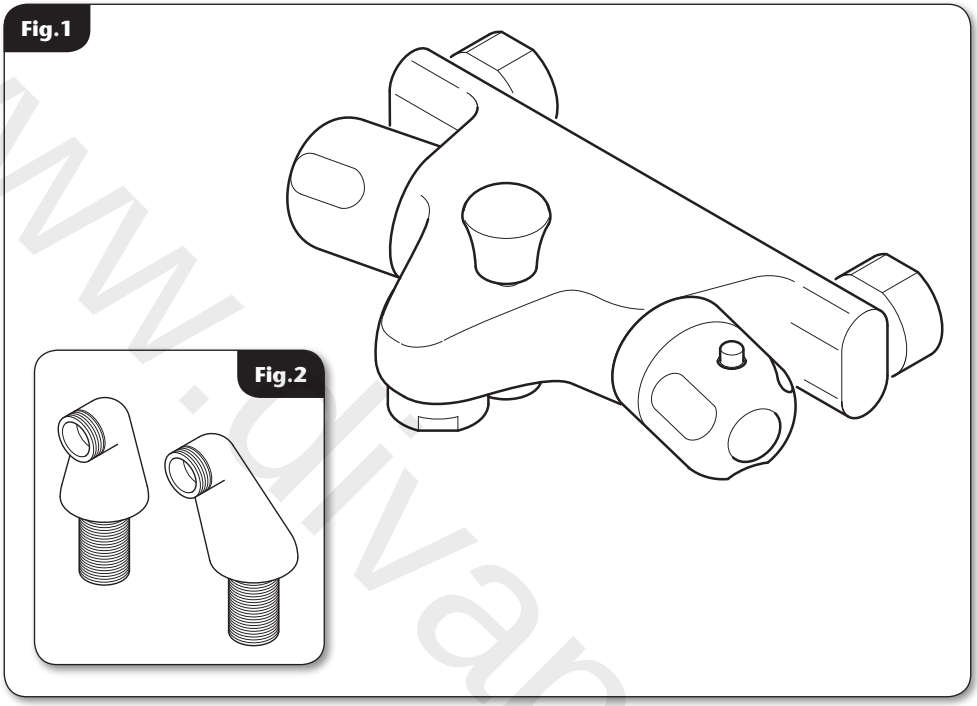

Fig 1. Thermostatic bath shower mixer

Fig 2. Bath pillars X2

All dimensions listed in this fitting book regarding the product and installation are approximate.

*All kits are for illustration purposes only and are not supplied unless otherwise stated.

www.divapor.com

INTRODUCTION

This book contains all the necessary fitting and operating instructions for your Triton mixer shower. Please read them carefully and read through the whole of this book before beginning your installation.

The shower installation must be carried out by a suitably competent person and in sequence of this instruction book.

Care taken during the installation will give a long and trouble free life from your mixer shower.

SITE REQUIREMENTS

The installation must be in accordance with Water Regulations and Bylaws.

Water pressure requirements

Running water pressure:

Mains fed - 1.0 bar min.
5.0 bar max.

Maximum static water pressure:

Gravity and mains - 10 bar

This mixer shower is designed for higher pressure systems found in the UK up to a maximum of 5 bar running pressure.

For effective operation of the internal seals, the maximum static pressure must not be exceeded.

Pressure reducing valve

On sites where the running pressure is above 5 bar, the use of a suitably sized pressure reducing valve fitted in the cold mains supply pipe work can provide nominally equal pressures at the mixer shower.

Water minimum flow rate

For best performance within the specified running pressure range a minimum flow of 8 litres per minute should be available to both inlets.

Water temperature requirements

Maximum hot water temperature:	= 80°C
Recommended maximum:	= 65°C
Minimum hot water temperature:	= 52°C
Maximum cold water temperature:	= 20°C

The mixer shower MUST NOT be subjected to water temperatures above 80°C.

BS 6700 recommends that the temperature of stored water should never exceed 65°C.

A stored water temperature of 60°C is considered sufficient to meet all normal requirements and will minimise the effects of scale in hard water areas.

Water temperature adjustment and thermal safety

The mixed water temperature can be adjusted from cold through to a top limit which must be preset during installation with full anti-scald protection throughout the range (35°C to 40°C) providing the hot water temperature at the inlet remains 10°C above the outlet temperature.

Should there be a loss of flow to either incoming supply then- water from the shower will stop or be reduced until both supplies are restored.

SAFETY WARNINGS

a. **DO NOT** choose a position where the shower could become frozen.

b. **DO NOT** connect this mixer shower to any form of tap or fitting not recommended by the manufacturer.

c. **DO NOT** allow the inlet pressure or flow rates to operate outside the guidelines laid out in 'site requirements'.

Replacement parts can be ordered from Triton Customer Service. See *'spare parts'* for details and part numbers.

www.divapart.com

PLUMBING REQUIREMENTS

DO NOT use jointing compounds on any pipe fittings for the installation,

DO NOT solder fittings near the mixer unit as heat can transfer along the pipework and damage the mixer valve.

IMPORTANT:

- The layout and sizing of pipework MUST be such that nominally equal inlet supply pressures are achieved and the effects of other draw-offs are minimised.
- The pipe-work should be installed such that other taps and appliances being operated elsewhere on the premises do not significantly affect the flow
- When connecting pipe-work avoid using tight 90° elbows; swept or formed bends will give the best performance.
- The hot water pipe entry must be made to the left-hand side inlet, marked HOT, 'H' or with a red/orange label.
- Suitable isolating valves (complying with Water Regulations and Bylaws) must be fitted on the hot and cold water supplies to the shower as an independent means of isolating the water supplies should maintenance or servicing be necessary.
- It is preferable to flush the pipe-work to clear the system of debris and check for leaks before connecting to the mixer.
- The mixer inlets contain removable filters that may become blocked if debris is not flushed through before fitting.

(Commercial applications)

- Triton recommends for all commercial applications that, easily accessible, in-line filters are used to aid maintenance.

Hard water areas

a. If it is intended to operate the shower in areas of hard water (above 200-ppm temporary hardness), a scale inhibitor may have to be fitted. For advice on the Triton scale inhibitor, please contact Customer Service.

b. For best performance the showerhead MUST be regularly cleaned to remove scale and debris.

WATER SYSTEM REQUIREMENTS

This mixer shower is suitable for: -

- Pumped gravity systems.
- Fully modulating type combination boilers
- Multi-point hot water heaters.
- Thermal storage,
- Unvented systems

When installing this mixer with a Combination or multi-point boiler, it may be necessary to install flow regulation.

Check that the appliance is capable of delivering hot water at a minimum switch-on flow rate of 3 litres per minute. At flow rates between 3 and 8 litres per minute, the appliance must be capable of raising the water temperature to 52°C (minimum).

Water temperature at the inlet of the mixer valve must remain relatively constant when flow rate adjustments are made (refer to the appliance-operating manual to confirm compatibility with this mixer shower).

Where thermal store systems and instantaneous gas water heaters are used, if excessive draw-off take place the appliance may not be able to maintain an adequate output temperature. This could result in the shower temperature becoming noticeably cooler.

Flow regulators can be fitted with high-pressure water systems to reduce flow rate and assist economy.

The hot supply temperature MUST remain a minimum of 10°C hotter than the required blend temperature for optimum performance.

***Fig.3** **(diagrammatic view – not to scale)*

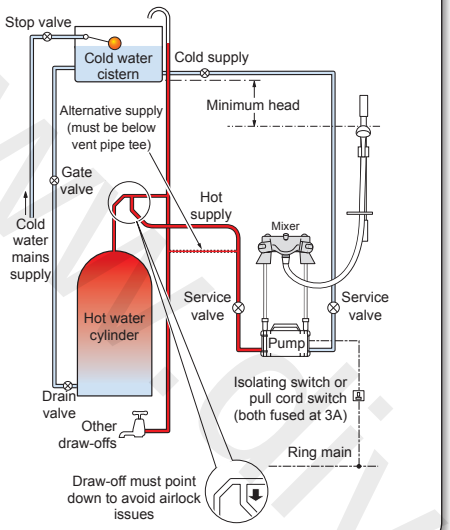

***Fig.4** **(diagrammatic view – not to scale)*

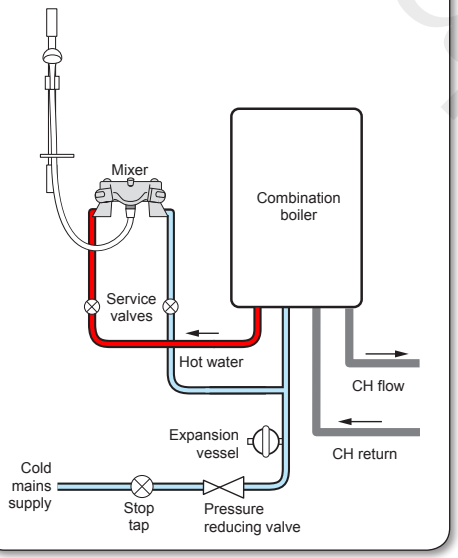

TYPICAL DOMESTIC INSTALLATIONS

Pumped gravity fed systems (fig.3)

The shower control MUST be fed from a cold water cistern and hot water cylinder providing nominally equal pressures.

The mixer unit may be used with a gravity fed system with a pump to boost pressures as shown; please refer to the pump installation guide to establish the minimum head requirements for automatic operation of the pump

Instantaneous gas-heated systems, e.g. combination boilers (fig.4)

The shower control MUST be installed with a multi-point gas water heater or combination boiler of a fully modulating design (i.e. to maintain relatively stable hot water temperatures).

A drop tight pressure reducing valve MUST be fitted if the supply pressures exceed 5 bar running.

An expansion vessel **MAY** be fitted, and regularly maintained, to prevent the shower mixer being damaged by excess pressures. This may already be installed within the boiler (check with manufacturer) and is in addition to the normally larger central heating expansion vessel.

www.sivapsor.com

Unvented mains pressure systems (fig.5)

The shower control can be installed with an unvented, stored hot water cylinder.

For systems with no cold water take off after the appliance reducing valve, it will be necessary to fit an additional drop tight pressure-reducing valve when the mains pressure is over 5 bar. The drop tight pressure reducing valve must be set at the same value as the unvented package pressure reducing valve.

Note: An additional expansion vessel may be required if a second pressure-reducing valve is installed. This does not apply to packages with a cold take off after the pressure-reducing valve to the cylinder.

***Fig.5** **(diagrammatic view – not to scale)*

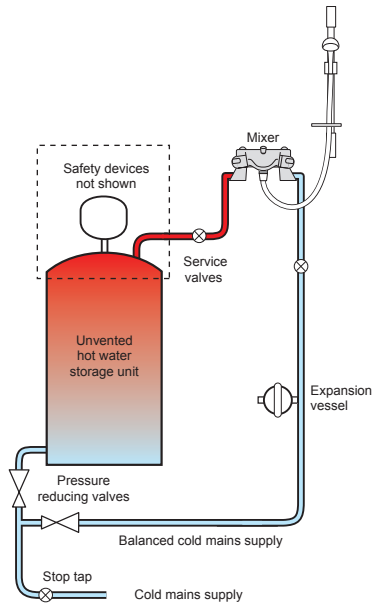

www.divapor.com

***Fig.6** **(diagrammatic view – not to scale)*

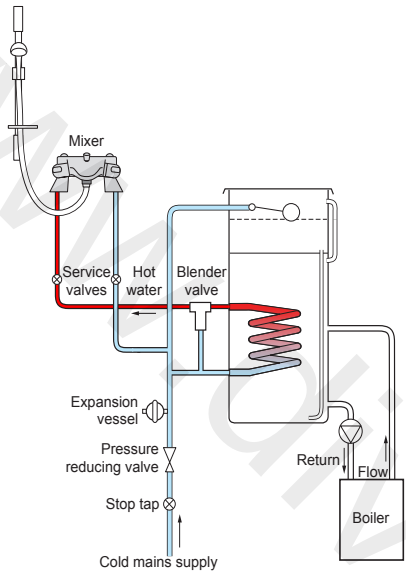

Mains pressurised thermal store systems (fig.6)

Packages of this type, fitted with a tempering valve (blender valve) can be used. A drop tight pressure reducing valve MUST be fitted if the supply pressures exceed 5 bar running.

An expansion vessel MUST be fitted, and regularly maintained, to ensure, the unit, is not damaged by excess pressures. This may already be installed externally or internally within the thermal store (check with thermal store manufacturer).

www.rainvapor.com

INSTALLATION

PREPARING THE MIXER VALVE

Check the contents to make sure all parts are present.

Before starting the mixer installation, make sure all the openings on the valve are carefully covered to stop ingress of any debris, etc. while routing the supply pipework.

The shower valve is suitable for exposed installation onto solid wall, a stud partition wall, dry lined wall or fixing to a laminate cubicle or panel.

SITING OF THE SHOWER AND ACCESSORIES

Refer to **(fig.7)** for correct siting of the shower.

The mixer valve should be positioned, as detailed, with all controls within comfortable reached of the user.

The accessories (showerhead, riser rail and / or fixed showerhead) can be positioned above or to either side of the shower.

SUPPLY PIPE WORK

Complete the pipework to the shower area having decided on the position of the shower and direction of pipe entry (for example rising, falling or rear entry)

The hot and cold water pipes should be securely attached within the wall or panel to support the valve and prevent movement after installation.

***Fig.7** **(diagrammatic view – not to scale)*

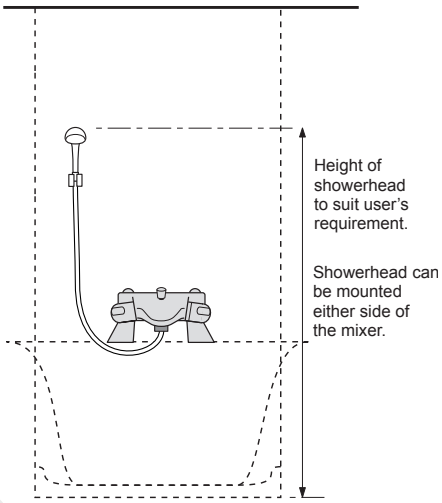

www.divapor.com

Fig.8

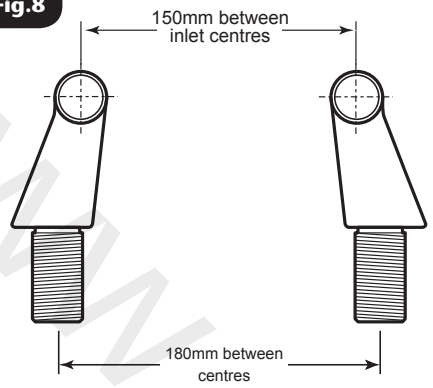

Fig.9

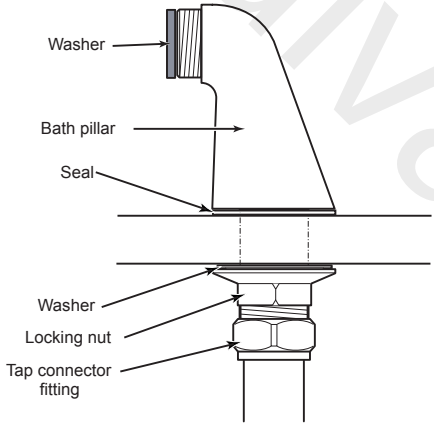

Fig.10

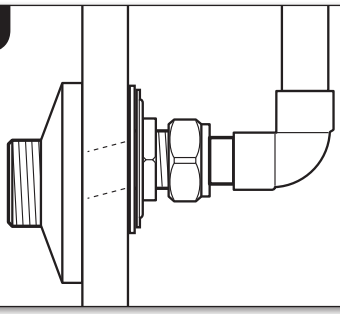

BATH PILLAR FITTINGS

The bath pillars pipes must be routed as rising

The inlet centres on the shower valves are 150mm and the inlet centres on the bath pillars are 180mm apart **(fig.8)**.

Insert the left-hand side pillar into the bath top, making sure the sealing washers are in place. Secure in place with the locking nut. Repeat the process for the right-hand side pillar. Check the inlet centres are correctly aligned for the mixer valve.

Offer the mixer valve to the bath pillars and, checking the sealing washers are in place, screw the unions into the fittings.

Connect pipework to the pillars using standard ¾" BSP tap connector fittings **(fig.9)**.

Note: The mixer can also be fitted using the "Bar Mixer Fittings" listed as optional extras on page 12. The following "VARIABLE FITTING" section gives an example of this.

VARIABLE FITTINGS (optional)

The variable connectors can be used to connect to ½" BSP female elbow fittings in solid wall installations. The inlet centres on the variable connectors have a degree of adjustment to allow for misalignment of pipe work.

The hot and cold supply pipes must be anchored rigidly to support the valve and stop any movement after installation.

If installing in hollow walls or laminate cubicles, fittings are supplied to compress onto the wall to support the mixer valve.

The maximum thickness of wall is about 20mm; enough room must be left on the connector to fit the compression nut and olive. At the front end, an allowance must be made to accept the shower union and collar.

Flush out the pipework in accordance with Water Regulations and Bylaws.

Connect 15mm pipework using standard compression nuts and olives **(fig.10)**.

Screw the supplied collars onto the fittings until tight to the wall.

www.plumbing.com

MAKING GOOD

Make good the wall and complete the tiling.

FITTING THE MIXER

Offer the shower valve to the fittings and, checking that the sealing washers are place, screw the unions onto the fittings.

FLOW REGULATION

A flow regulator is supplied for use with high-pressure water systems. It may be fitted with any of the systems listed to reduce flow rate and assist economy.

TO FIT THE FLOW REGULATOR

Fit the flow regulator into the outlet fitting as shown in **(fig.11).**

LEAK TESTING

Fit the hose to the outlet and direct it to waste. Open the isolating valves to the shower and check for leaks. Remedy any leaks found.

COMMISSIONING

Important: Make sure that all supply pipework has been flushed through before commissioning.

Start the water flow by rotating the flow control

Make sure that both the hot and cold water supplies are fully open and at (or near to) their design temperature and pressures, and are within the requirements as stated.

Make sure the temperatu-re control is at the maximum temperature setting.

Allow the shower to run at the maximum temperature setting until the water temperature has stabilised. Rotate the temperature control until your desired maximum showering temperature is reached.

The mixer has a temperature stop to prevent accidental rotation to higher temperatures. This is adjustable to provide a maximum temperature of 35°C – 45°C and should be checked on site to guarantee user safety.

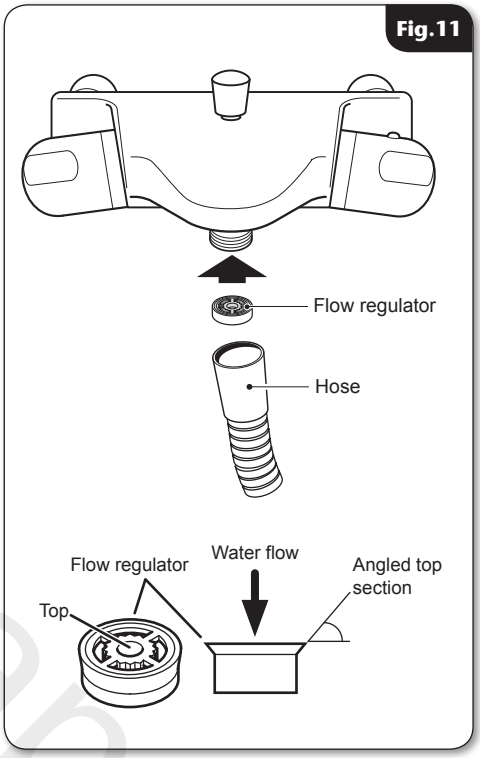

www.aivapor.com

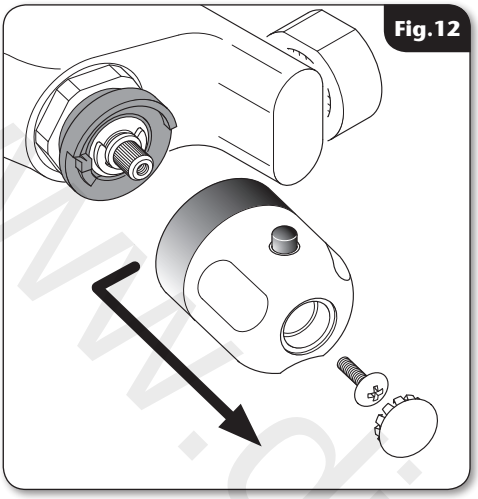

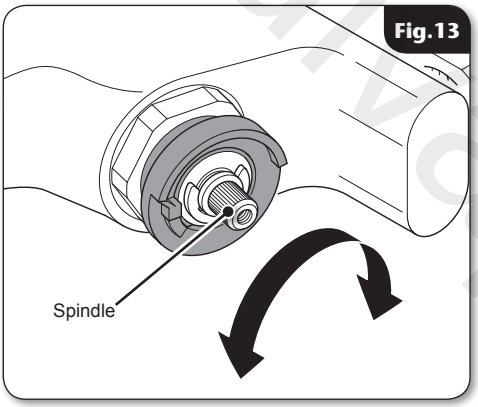

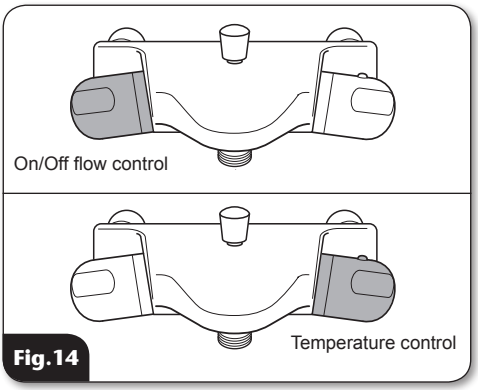

TEMPERATURE ADJUSTMENT RANGE

The mixed water temperature can be adjusted from cold through to a top limit (which can be pre-set during installation – factory set at approximately 38°C) with full anti-scald protection throughout the range.

Adjusting the maximum temperature override setting

Remove the temperature control by removing the end cap and unscrewing the retaining screw **(fig.12)**.

Turn the flow control to full flow. With a steady flow running, adjust the temperature valve spindle until the temperature is about 38°C **(fig.13)**.

When you are satisfied with the temperature turn the flow control off. Refit the temperature control, checking that the temperature stop aligns with the reference dot on the mixer body. Secure with the screw and replace the end cap.

www.drvapor.com

OPERATING THE BATH SHOWER MIXER

To start the mixer, rotate the On/Off flow control (left-hand side) fully anti-clockwise for maximum flow.

To stop the water flow, rotate the On/Off flow control fully clockwise.

To adjust the water temperature, rotate the temperature control (right-hand side) – clockwise for cool or anti-clockwise for hot **(fig.14)**.

To overcome the maximum temperature stop, press the red button and turn.

USING THE SHOWER SETTING

To use the shower setting pull up and turn the diverter knob in either direction **(fig.15)**.
To return to the tap setting, turn in either direction and allow the diverter knob to drop down **(fig.16)**.

Caution: Exposed metal surfaces may become hot during use.

Fitting the fixed showerhead holder (if supplied)

Decide the position for the showerhead holder on the wall within the bath shower area

Proceed as follows:

- Hold the showerhead holder mounting plate in a suitable position on the wall. Using the plate as a template, mark two locating holes **(fig.17)**.
- Drill and plug the wall.

(The wallplugs provided are suitable for most brick walls – use an appropriate masonry drill, but if the wall is plasterboard or a soft building block, use special wallplugs and an appropriate drill bit).

- Replace the mounting plate and secure using the fixing screws supplied.
- Slide the showerhead holder down onto the mounting plate **(fig.17)** until it clicks into place.

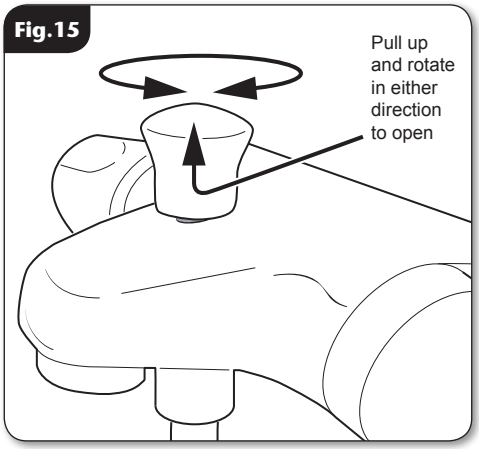

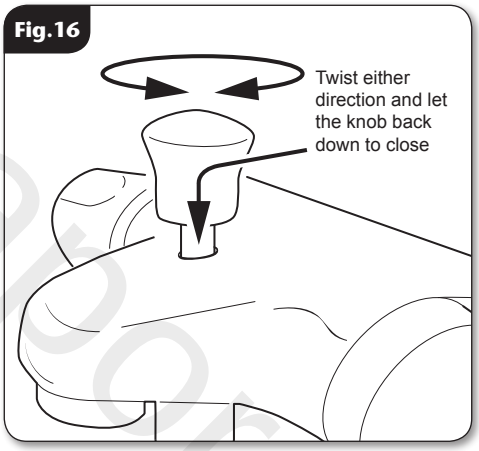

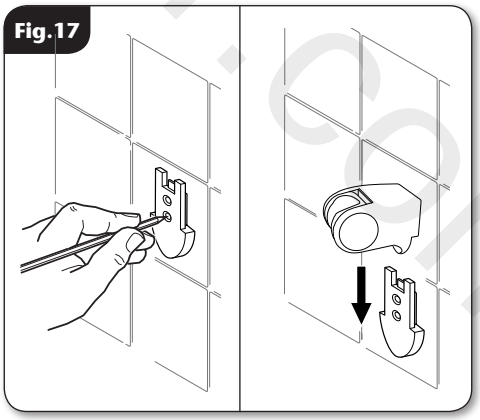

www.ivapor.com

DIMENSIONS

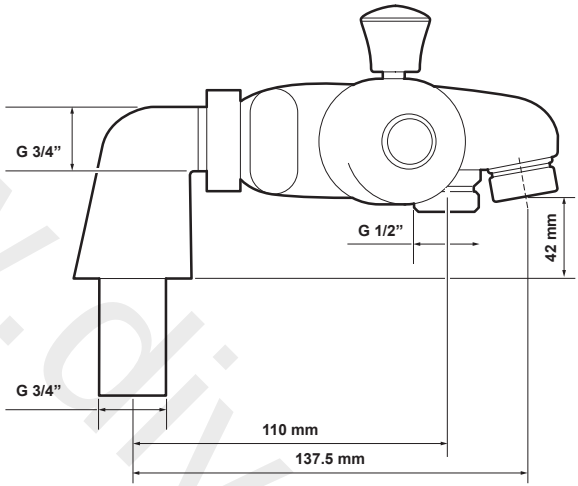

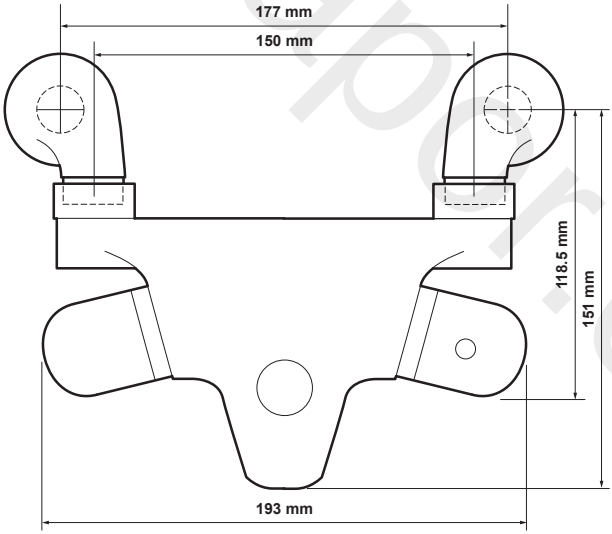

All dimensions listed in this fitting book regarding the product and installation are approximate.

www.divapoint.com

*BAR MIXER FITTINGS

Ref.	Description	Part No.
A.	Bar bracket	UNBMXBKT
B.	Bar bracket, exposed	UNBMXFIXEX
C.	Bar bracket, push-fit	UNBMXFIXBT
D.	Straight connector	86001120
E.	Dogleg connector	86001110

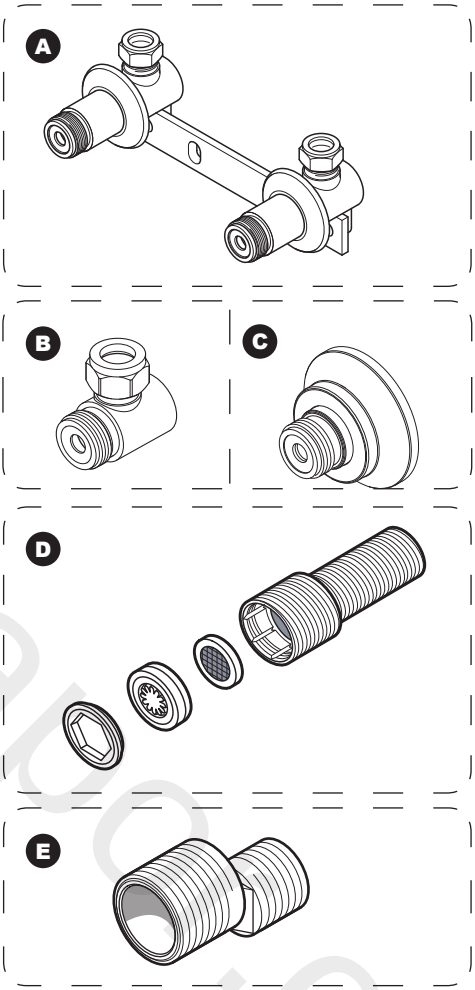

** Not supplied unless otherwise stated*

www.divapro.com

SPARE PARTS

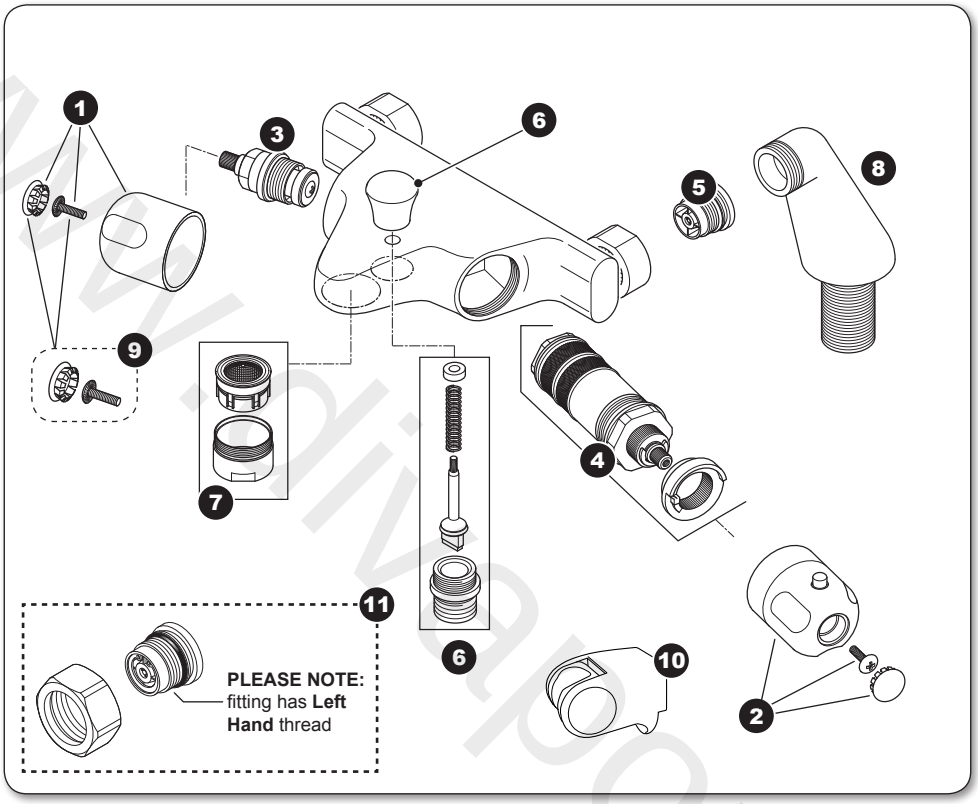

Ref.	*Description*	*Part No.*
1.	Flow control knob	83313250
2.	Temperature control knob	83313260
3.	Flow control cartridge	83307320
4.	Thermostatic cartridge	83313270
5.	Non return valve X2	83307290
6.	Divertor assembly	83313300
7.	Outlet	83307540
8.	Bath pillar X2	83307550
9.	Knob trims X2	83313290
10.	Showerhead Holder *(if supplied)*	22010670
11.	Inlet assy complete X2	83315250

www.divapor.com

MAINTENANCE

The following maintenance procedure must be carried out for commercial and health care premises, but is not necessarily required for domestic installations.

Maintenance of the unit is required to give continued performance after installation and that it continues to provide scald prevention.

Note: A thermostatic mixing valve in need of maintenance can be undetectable in normal use and only becomes apparent when a disruption occurs in the hot or cold water supply temperatures or pressures.

The frequency of routine maintenance of the internal of the valve will depend mainly on the water supply condition. Experience of local conditions will dictate the intervals for inspection and in-service testing; guidance has been given below which can be adjusted for local requirements.

a) Initially check the filters for debris once every three months and clean if necessary.

b) Perform a thermal shut off test every three months, and check the maximum temperature setting. See the 'Commissioning' section for the details of this test and readjustment of the maximum temperature setting if required.

c) If the maximum water temperature varies by more than 2°C from the commissioned setting then carry out the following checks

- Check the isolating valves are fully open.
- Check the internal surface for scaling.

If the body requires descaling then it should be removed from the pipework to carry this work out (all rubber parts must be removed before descaling).

- Check the function of the non-return valves

The non-return valves (NRVs) prevent cross-flow between hot and cold supplies under unequal pressure conditions. They are designed for long life with no maintenance.

If these checks do not highlight the reason for the temperature variation, then internal components will require replacement; please see the spare parts list.

Cleaning

Triton recommends that all products are cleaned using warm, soapy water.

Do not use abrasive or aggressive chemical cleaning products as this may affect the product surface finish and invalidate your guarantee.

Cleaning the filters (fig.18)

It is advised that this should be carried out by a qualified person.

Turn off the water supplies before starting.

To gain access to the filters remove the unit from the inlet fittings.

Remove the sealing washers from the inlets.

Wash thoroughly under running water to remove all debris using a suitable brush. Refit the sealing washer and reassemble the shower onto the inlet fittings.

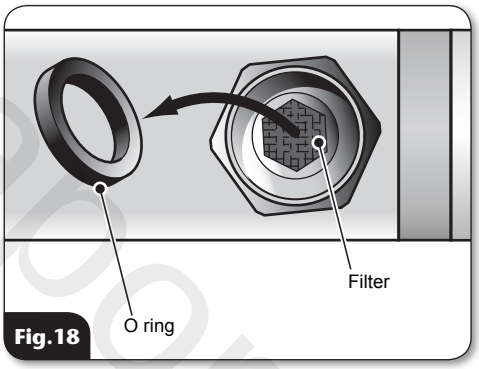

Fig.18

Disinfection

Where chlorine is used for the disinfection of water systems all relevant guidelines and approved codes of practice must be strictly followed. Failure to comply with the relevant guidelines and approved codes of practice may invalidate your guarantee.

WARNING!

DO NOT use 'powerful' abrasive or solvent cleaning fluids when cleaning the shower as they may damage the fittings.

www.envapor.com

FAULT FINDING

The following can be carried out by a competent person

Problem/Symptom	*Cause*	*Action/Cure*
1 Water too hot.	***1.1*** Temperature control incorrectly commissioned.	***1.1.1*** Refer to commissioning section.
	1.2 Not enough cold water flowing through shower.	***1.2.1*** Reposition temperature control knob
	1.3 Increase in the ambient cold water temperature.	***1.3.1*** Reposition temperature control knob.
	1.4 Cold water supply blocked.	***1.4.1*** Turn off the shower and consult a competent plumber or contact Triton Customer Service.
	1.5 High volume of cold water drawn off elsewhere.	***1.5.1*** Reduce the simultaneous demand from the supply.
2 Water too cold.	***2.1*** Temperature control incorrectly commissioned.	***2.1.1*** Refer to *'commissioning'* section.
	2.2 Not enough hot water flowing through shower.	***2.2.1*** Reposition temperature control knob
	2.3 Decrease in the ambient cold water temperature.	***2.3.1*** Reposition temperature control knob
	2.4 Insufficient hot water supplies from the heating system.	***2.4.1*** Make sure heating appliance is set to maximum or has sufficient stored hot water. ***2.4.2*** Make sure heating appliance is igniting by trying a hot water tap elsewhere.
	2.5 Hot water supply blocked or restricted.	***2.5.1*** Turn off shower and consult a competent plumber or contact Triton Customer Service.
	2.6 Flow regulator not fitted (HP systems only).	***2.6.1*** Fit the supplied flow regulator ***(Page 9)***.
3 High water flow and/or poor performance on a mains fed system.	***3.1*** Flow regulators not fitted.	***3.1.1*** Fit flow regulator ***(Page 9)***.

www.divapor.com

FAULT FINDING

Problem/Symptom	*Cause*	*Action/Cure*
4 Water does not flow or shower pattern collapses when another outlet is turned on.	***4.1*** Water supplies cut off.	***4.1.1*** Check water elsewhere in house and if necessary contact local water company.
	4.2 Shower unit blocked.	***4.2.1*** Inspect the inlet filters. Clean if necessary.
	4.3 Blockage in pipework.	***4.3.1*** Turn off the shower and consult a suitably competent plumber.
	4.4 Showerhead blocked.	***4.4.1*** Clean showerhead.
	4.5 System not capable of supplying multiple outlets at the same time.	***4.5.1*** Reduce the simultaneous demand. ***4.5.2*** Make sure stop/service valves are fully open. ***4.5.3*** Check if sufficient water pressure.
The following is recommended for a professional qualified installer only		
5 Water too cold.	***5.1*** Running pressure in excess of maximum recommended.	***5.1.1*** Fit a pressure reducing valve.
6 Shower controls noisy while in use.	***6.1*** Running pressure in excess of maximum recommended.	***6.1.1*** Fit a pressure reducing valve.
7 Shower will not shut off.	***7.1*** Flow control cartridge worn.	***7.1.1*** Renew flow control cartridge.

www.vapor.com

UK SERVICE POLICY

In the event of a product fault or complaint occurring, the following procedure should be followed:

1. Telephone Customer Service on **0844 980 0750** having available, your details including post code, the model number and power rating of the product, together with the date of purchase and, where applicable, details of the particular fault.
2. If required, the Customer Service Advisor will arrange for a qualified engineer to call.
3. All products attended to by a Triton service engineer must be installed in full accordance with the Triton installation guide applicable to the product. *(Every product pack contains an installation guide, however, they can also be bought via our Customer Service Spares Department).*
4. Our engineer will require local parking and if a permit is required this must be available to the engineer on arrival at the call.
5. It is essential that you or an appointed representative *(who must be over 18 years of age)* is present for the duration of the service engineer's visit. If the product is in guarantee you must produce proof of purchase.
6. Where a call under the terms of guarantee has been booked and the failure is not product related *(i.e. scaling and furring, incorrect water pressure, pressure relief device operation or electrical/plumbing installation fault)* a charge will be made. A charge will also be issued if nobody is at home when the service engineer calls or adequate parking/permit is not available.
7. If the product is no longer covered by the guarantee an up front fixed fee will be charged before the site visit.
8. Should proof of purchase not be available on an "in-guarantee" call, or should the service engineer find that the product is no longer under guarantee, the engineer will charge the same fixed price and the customer will be expected to pay the engineer before he leaves. If payment is not made on the day an administration charge will be added to the fixed charge.
9. If a debt is outstanding from a previous visit, or from any other Triton purchase. Triton reserves the right to withhold service until the debt has been settled.
10. Triton takes the health, safety and wellbeing of its employees very seriously and expects customers to treat all staff members with respect. Should any employee feel threatened or receive abuse, either verbally or physically, Triton reserves the right to withhold service and will support the employee with a legal prosecution.

Replacement Parts Policy

Availability: It is the policy of the manufacturer to maintain parts availability for the duration of production and a period of five years thereafter, in accordance with industry standards.

Spare parts are available via our website, www.tritonshowers.co.uk, or by telephoning Triton Customer Service Spares Department. Payment should be made by credit/debit card (excluding American Express or Diners Card). Payment can also be made by pre-payment of a pro forma invoice by cheque or money order.

Telephone orders are based on information given during of the call.

Before contacting Triton, please verify your requirements using the information contained in the supplied user guide. Triton cannot accept liability for incorrect part identification.

TRITON STANDARD GUARANTEE

With the exception of accessories, Triton guarantee the product against all manufacturing defects for a period of **5 years** (for domestic use only) from the date of purchase, provided that it has been installed by a competent person in full accordance with the fitting instructions.

All accessories such as shower heads, hoses and riser rails carry a **1 year** parts only guarantee against manufacturing defects.

Any part found to be defective during this guarantee period we undertake to repair or replace at our option without charge so long as it has been properly maintained and operated in accordance with the operating instructions, and has not been subject to misuse or damage. This product must not be taken apart, modified or repaired except by a person authorised by Triton. This guarantee applies only to products installed within the United Kingdom and does not apply to products used commercially. This guarantee does not affect your statutory rights.

What is not covered:

1. Breakdown due to: ***a)*** use other than domestic use by you or your resident family; ***b)*** wilful act or neglect; ***c)*** any malfunction resulting from the incorrect use or quality of electricity, gas or water or incorrect setting of controls; ***d)*** failure to install in accordance with this installation guide
2. Claims for missing parts once the product has been installed.
3. Repair costs for damage caused by foreign objects or substances.
4. Total loss of the product due to non-availability of parts.
5. Compensation for loss of use of the product or consequential loss of any kind.
6. Call out charges where no fault has been found with the appliance.
7. The cost of repair or replacement of pressure relief devices, showerheads, hoses, riser rails and/or wall brackets, isolating switches, electrical cable, fuses and/or circuit breakers or any other accessories installed at the same time.
8. The cost of routine maintenance, adjustments, overhaul modifications or loss or damage arising therefrom, including the cost of repairing damage, breakdown, malfunction caused by corrosion, furring,
9. Call out charges where the water supply cannot be isolated, this includes consequential losses arising from unserviceable supply valves.

For the latest Terms & Conditions, please see: www.tritonshowers.co.uk

Triton Showers
Triton Road
Nuneaton
Warwickshire CV11 4NR

Triton is a division of Norcros Group (Holdings) Limited

Customer Service: ☎ 0844 980 0750

Trade Installer Hotline: ☎ 0844 980 0730
Fax: 0844 980 0744

www.tritonshowers.co.uk

E-mail: serviceenquiries@tritonshowers.co.uk

TRITON reserve the right to change product specification without prior notice. E&OE. © TRITON SHOWERS 2013