TSBC073

SOMERSBY Tap Range
Somersby 3 Hole Bath Filler

Specification

Product Type:	Bathroom Tap
Main Construction Material:	Brass
Mount Type:	Deck Mounted
Handle Type:	Lever Handle
Connection Inlet:	G 3/4" BSP
Connection Outlet:	Open
Number of Tap Holes:	3
Valve/Cartridge Type:	1/4 Turn 3/4" Ceramic Disc Valve
Plumbing System Requirements:	Suitable for all plumbing systems
Minimum Dynamic Pressure (bar):	0.2 bar
Maximum Dynamic Pressure (bar):	5.0 bar
Maximum Hot Water Temperature °C:	60°C
Maximum Static Pressure (bar):	10 bar
Flow Type:	Single Flow
Isolation Included:	No

Features:

- Compatible with low pressure water systems, optimised for UK market
- Quarter turn ceramic discs - for smooth operation and added durability

Product Certifications:

Additional Information:

Dimensions (measurements in mm)

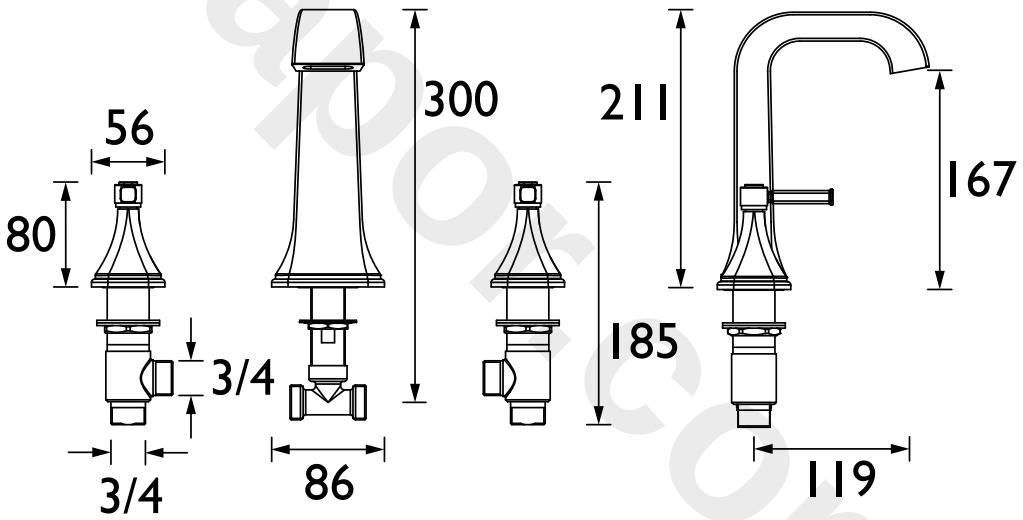

Flow Rates (l/min)

System Pressure (bar)	0.2	0.5	1	2	3	5
TSBC073 (mixed)	20.9	37.7	54.3	78.3	80.9	104.5

TECHNICAL DATA SHEET

5 YEAR GUARANTEE ~ 10 YEAR GUARANTEE ~ *

HERITAGE® BATHROOMS

D3

Heritage Bathrooms, Birch Coppice Business Park, Dordon, Tamworth, B78 1SG. Telephone: 0330 026 8503. Web Site: www.heritagebathrooms.com Email: technical@heritagebathrooms.com.

***10 year guarantee applies to products purchased on or after 01/04/2021. Non-chrome product finishes carry a 3 year guarantee on finish.** All of our products are covered by a guarantee. Most include both parts and labour. Please note that guarantees are only valid with a proof of purchase. Our guarantees apply to products in domestic use. Any products in commercial use carry a guarantee of 1 year. See www.heritagebathrooms.com/warranty for more information. The information contained on this page was correct at date of issue. Fitting Dimensions are provided as a guide only. Some variation may occur due to manufacturing tolerances. Heritage Bathrooms pursues a policy of continuous improvement in design and performance of its products and so reserves the right to change specifications without prior notice.

www.bathvapor.com