SSOBDUAL03

SOMERSBY Shower Range

Somersby Concealed Dual Control Valve Twin Stopcock
Flexible and Fixed Kit

Specification

Main Construction Material:	Brass
No of Controls:	3
Shower Type:	Recessed Thermostatic Shower
Shower Head Type:	8" Shower Rose & Deluxe Handset
Handle Type:	Lever
Valve/Cartridge Type:	Thermostatic Cartridge
Maximum Hot Water Supply Temperature °C:	65
Maximum Static Pressure: (bar)	10
Plumbing System Suitability:	All - Ideally Balanced
Working Pressure Range:	Min. 0.2 Bar, Max. 5.0 Bar
Connection Inlet:	15mm Compression
Connection Outlet:	15mm Compression & G 1/2"
Isolation Valve Included:	No
Check Valve Included:	Yes

Features:

- Optimised for UK market, designed to work at pressure range of 0.2 - 5.0bar
- Thermostatic temperature control and automatic stop prevent surges of hot or cold water
- Performance Flow to provide a drenching experience
- Suitable for cavities between 45-75mm
- Extra large 8" shower rose, deluxe 4" handset and hose outlet included
- Recessed

Dimensions (measurements in mm)

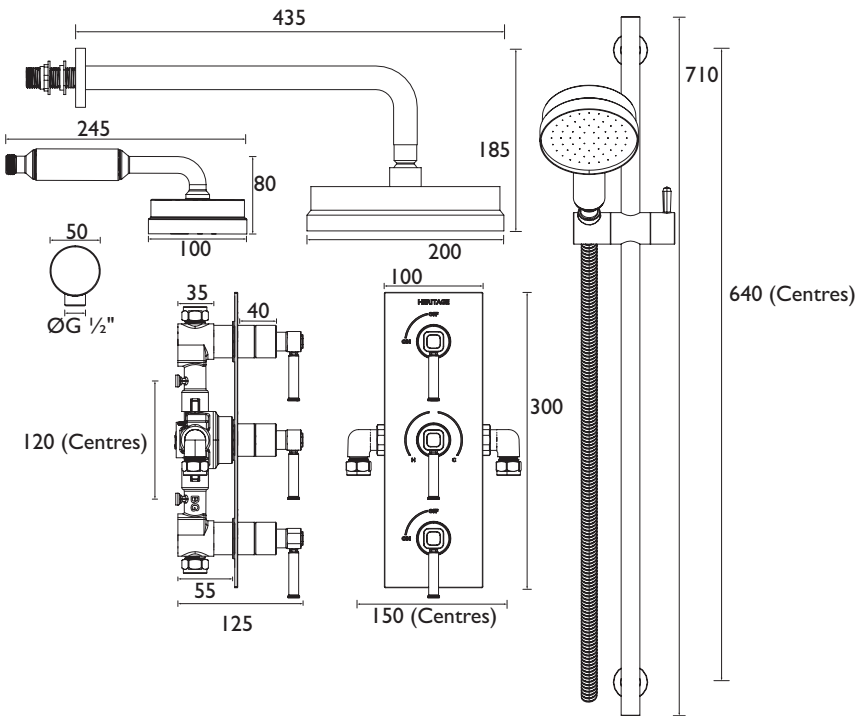

Product Certifications:

22.8 L/Min

Additional Information:

Flow Rates (l/min)

System Pressure (bar)	0.2	0.5	1	2	3	5
Through Handset (mixed)	4.3	8.1	12.3	18	22.8	29.5

TECHNICAL DATA SHEET

5 YEAR GUARANTEE

HERITAGE® BATHROOMS

D2

Heritage Bathrooms, Birch Coppice Business Park, Dordon, Tamworth, B78 1SG. Telephone: 0844 701 8501. Facsimile: 0844 701 8502 Web Site: www.heritagebathrooms.com Email: technical@heritagebathrooms.com. The information contained on this page was correct at date of issue. Fitting Dimensions are provided as a guide only. Some variation may occur due to manufacturing tolerances. Heritage Bathrooms pursues a policy of continuing improvement in design and performance of its products and so reserves the right to change specifications without prior notice. All of our products are covered by a guarantee. Most include both parts and labour. Please note that guarantees are only valid with a proof of purchase. Our guarantees apply to products in domestic use. Any products in commercial use carry a guarantee of 1 year. See www.heritagebathrooms.com/warranty for more information.