INSTALLATION

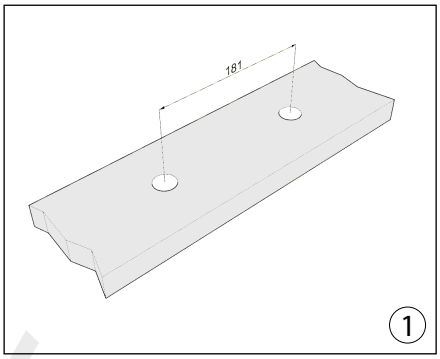

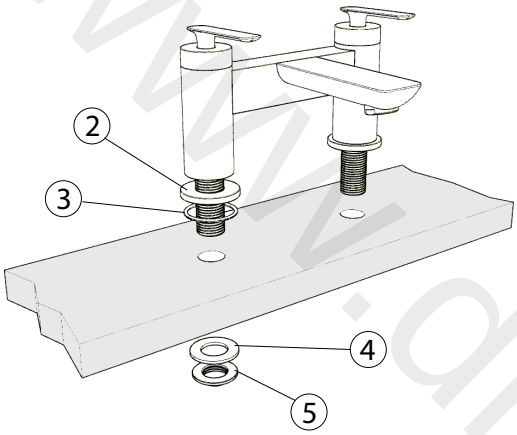

INSTALLATION

First shut off your heating system then, with your mains stop cock closed, open the Lowest hot and cold taps in the house and allow to run until the cold storage tank and pipes are empty (the hot water storage cylinder airways remains full).
Where combination boilers are fitted it is only necessary to turn off the boiler and shut off the incoming mains.
Fitting isolating valves to the inlet feeds is recommended for ease of maintenance.

Remember to turn off the mains water supply before connecting to any existing pipe work. Flush the piping with plenty of water prior to installation.

- Firstly verify that your border of bath tube is provided with correct holes (1).
- Install the base (2) and the seal (3), fit the mixer into the bath holes.
- Working below the bath holes, insert the washer (4) and the nut (5) onto each threaded column. Tighten the nuts having care to position correctly the mixer onto the bath.
- Connect the tap at the water system, but keep up in shut off position, the water heating system valves.

crosswater

MAINTENANCE

SI322DC

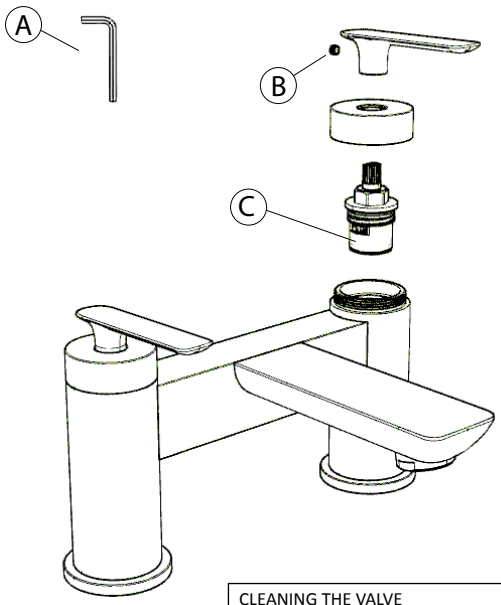

CLEANING THE VALVE
The concealed valve should give trouble free service, but in the event of any problems, servicing is straight forward. First shut off the water supply to the tap. With an allen key 2,5mm (A) loosen the grub screw (B) in handle, but do not remove it. Remove the handle and carefully using a correct size spanner unscrew the valve (C). Wash the valve with clean running water and make sure that any trapped debris have been removed. Dry and lightly grease the seals (only use silicone grease) and replace the valve, followed by the handle.

MIXER NOZZLES (Option)

All the taps are fitted with a flow straightener for use in low pressure installations. If your water is supplied at high pressure you may prefer to change the nozzle to an aerator To change the nozzle. Unscrew the nozzle from the mixer taking care not to loose the washer. Replace the washer, and screw on the chosen nozzle, hand tighten only.

FLOW STRAIGHTENER

AERATOR
(not included in the package)

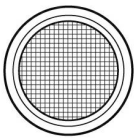

CLEANING

The chrome plate we use on our taps is very durable, nevertheless care should be taken when cleaning them.
They should be cleaned only with warm soapy water followed by rinsing with clean water and drying with a soft cloth.
All finishes are vulnerable to acid attack and some strong substances such as household cleaners, disinfectants, denture cleaners, hair dyes, wine making and photographic chemicals can cause the surface to go black or peel.

www.divapoint.com

BATH FILLER

SI322DC

crosswater

INSTALLATION INSTRUCTIONS

This product should only be fitted by a qualified plumber to NQV (NAtional Vocational Qualification) or SNVQ (Scottish National Vocational Qualification) Level 3. Should the Installation be completed by a non-qualified person then the guarantee may be considered invalid.
For a claim made under our warranty written certification of your installers credentials can be required. For further information or to find a qualified installer in your aerea please visit the Istitute of Plumbers website - www.iphe.org.uk.

THE QUALIFICATIONS

At present, to be a plumber you need to follow the National Vocational Qualification (NVQ) route (Scottish National Vocational Qualification-SNQV-in Scotland). These qualifications are made uo of theory and pratical work in the classroom/purpose built training facility and work based experience with a working plumber. Colleges should help students find a work placement, although many students organize it themselves.
The S7NVQ qualification works in levels. All recently qualifies plumbers should hold S7NVQ level 2 as basin with Level 3 as the preferred leve. Level 2 will give you the foudation you need for a career in plumbing and teach you domestic plumbing to a satisfactory level. Level 3 is more comprehensive and deals with domestic, commercial and industial plumbing along with aspects such as gas - if you want to one day set up your own business, this is the level to reach. The Istitute of Plumbing and Heating Engineering, and the industry as a whole recommand that all plumbers reach a minimum of Level 3.
Reaching Level 3 has other advantages. The Institute runs a Master Plumber Certificate, which only those attaining Level 3 or equivalent can reach as long as they have the relevant experience as well. Those with S/NVQ Level 3 can (once in membership with the Istitute for five years as a menber MIPHE) gain Engineering Technician EngTech status with the Engineering Council (UK).

For any further information please contact Crosswater on: **0845 873 8840**
Or visit our web-site at www.crosswater.co.uk
The manufacturer reserves the right to make technical modifications without prior notice

INTRODUCTION

Please read these instructions carefully and keep in a safe place for future reference.

General Installation Requirements

The installation must comply with regulations of the Local Water Authority as cintrained in their bylaws. All of the taps in this range are double flow (the hot and cold water are separated) and should therefore be supplied with hot and cold water at balanced pressures, both from the tank or both from the mains (via a combination boiler for exemple). If the taps are not supplied at balanced pressures then the tap will not function correctly, It will also be necessary to fit non-return valves on both hot and cold feeds. It is very important that all pipe work is flushed thoroughly after installation to avoid damaging the ceramic disc.

Standard specifications

1. Recommended working pressure:.....1 Bar
2. Maximum test pressure:.....5 Bar
3. Maximum hot water temperature:.....80° c
4. We recommend istalling filters ti thus product.
5. Warning:

-if the above mentioned conditions (see poits 1,2,3,4) are not observed, the product may not correctly work or not work at all.
- on receipt of this product the chrome finish must be checked for blemishes. Defects notified after fitting may be regarded as dmage resulting from the installation process, incorrect maintenance or misuse and as a result not be claimable under the warranty.

Approvals

All product are manutacture using materials tested and approved under the Water Bylaws Scheme and comply with requirements of British Stantard 5412:1996 where applicable.

Preparation and bylaw requirements

These taps are double flow. Water bylaw require that where the hot water is supplied from a tank and cold from the mains, non return valves are fitted on both hot and cold pipes as dose as possible to he tap, These are not supplied. Where combination boilers are fitted it is only necessary to shut off the incoming mains and turn the boiler off and non return valves are not required.

WARNING

-Intallation Performed By Qualified Personnel Only!
- Clean Carefully the water Pipes Before Intallating The Tap.

crosswater

DIMENSIONS

SI322DC

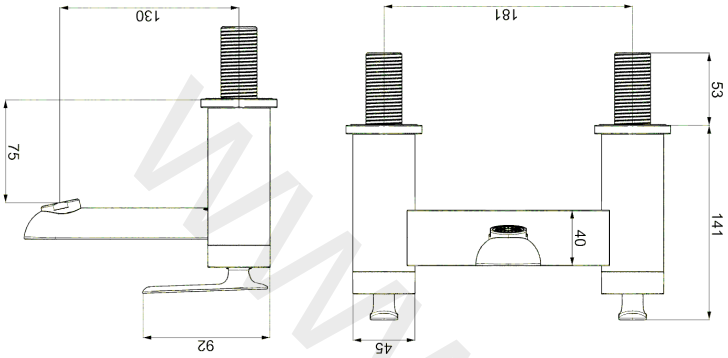

crosswater

www.divapor.com