measurements in millimetres (mm)
information updated October 2014

tel | 01322 422767
web | www.crosswater.co.uk
email | technical@crosswater-holdings.co.uk

crosswater
TECHNICAL

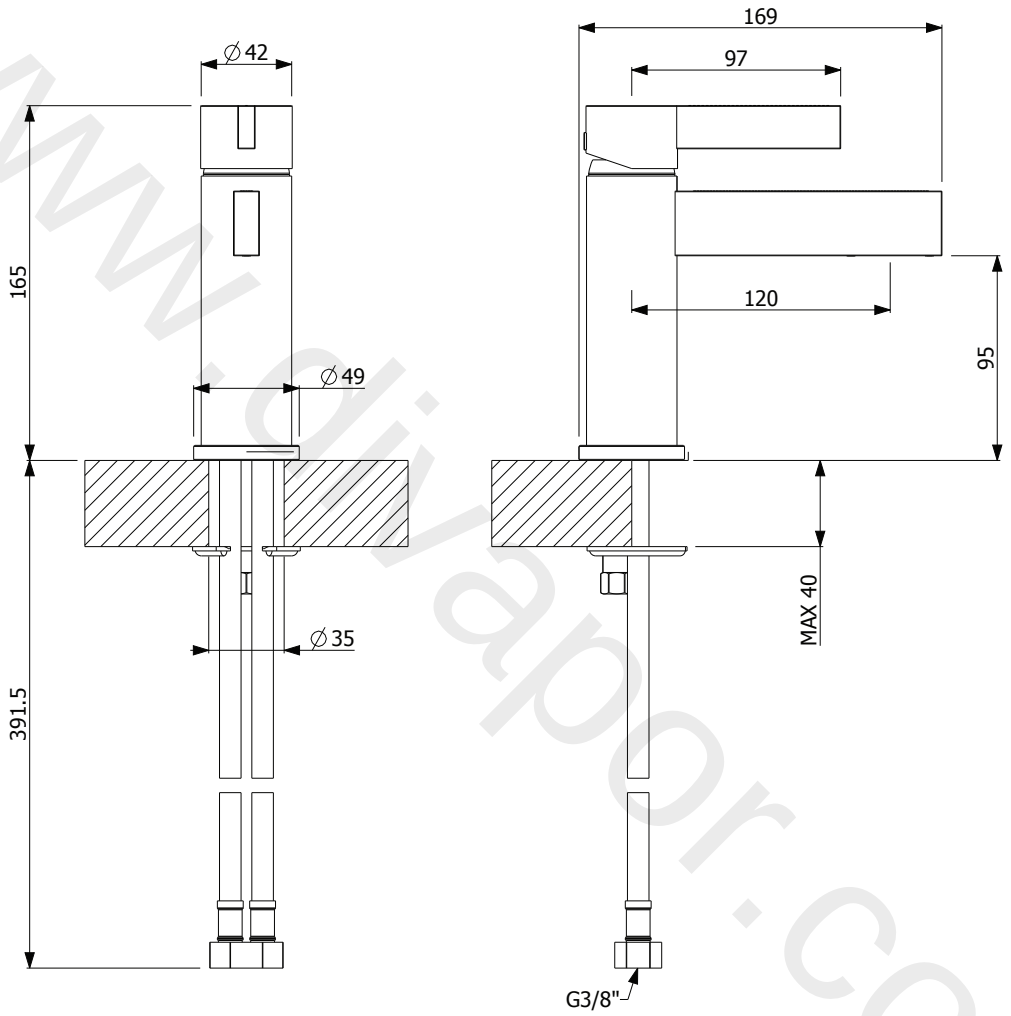

www.divapor.com

Sparkle Basin Monobloc without

Deck Mounted

SA110DNC

Available in Chrome (C)