RS BID C

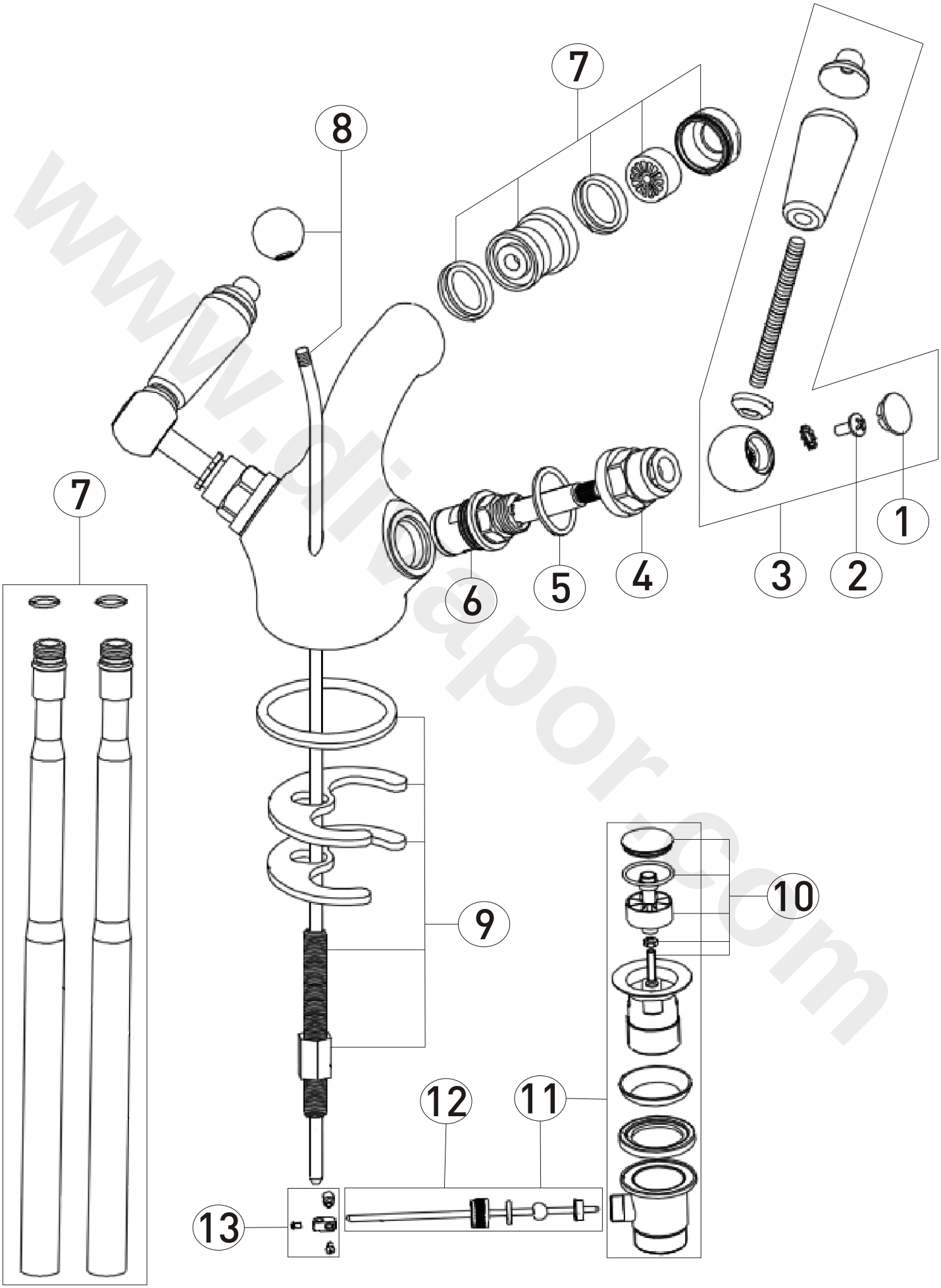

www.diyvapor.com