measurements in millimetres (mm)
information updated september 2013

tel | 01322 422767
web | www.crosswater.co.uk
email | technical@crosswater-holdings.co.uk

crosswater
TECHNICAL

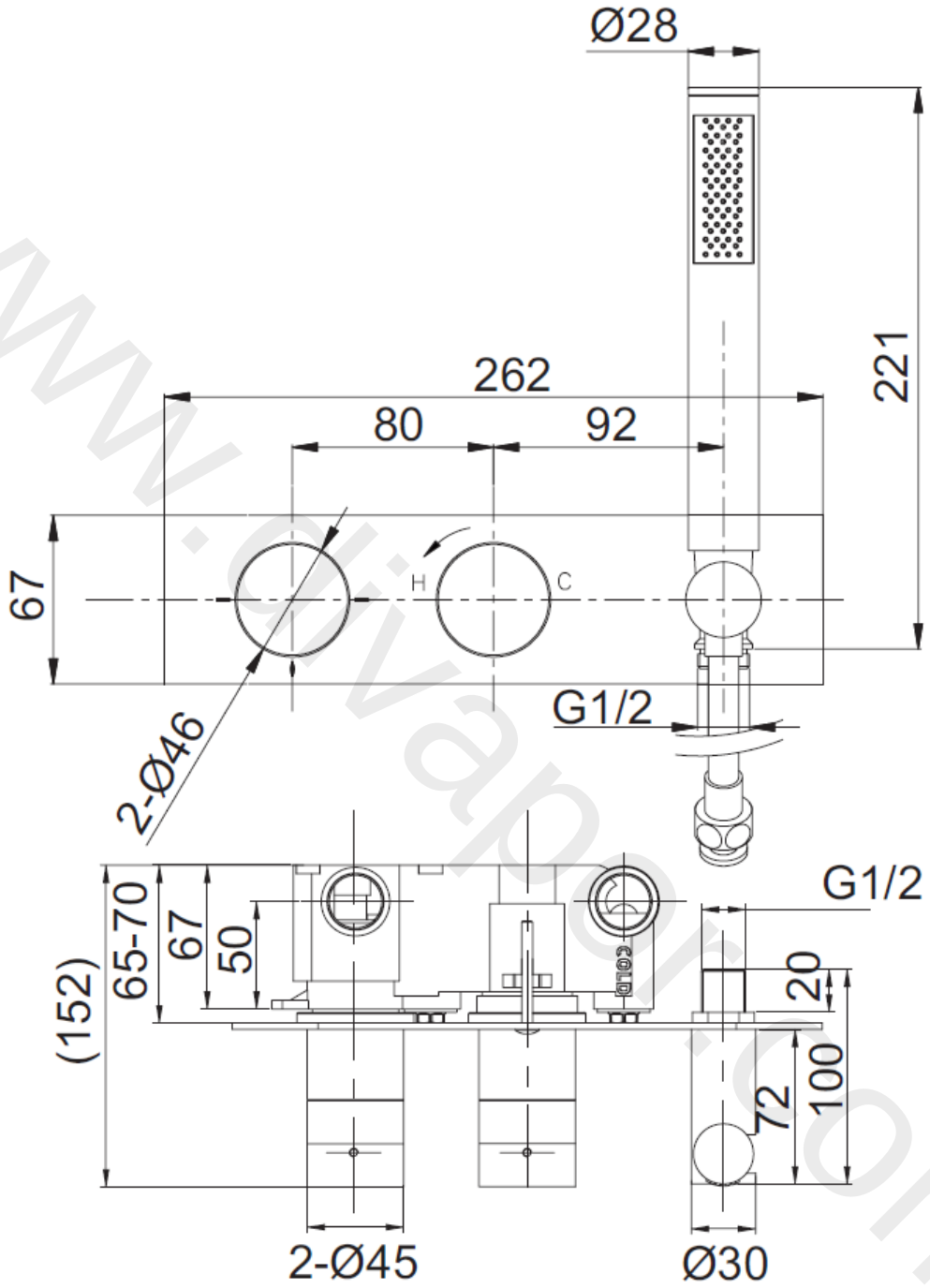


www.divaplaces.com

MIKE
PRO

Thermostatic bath shower vale - Bath and handset etched

Wall Mounted

PRO1701R

Available in Chrome (C) Brushed Stainless Steel (V) Anthracite (A) or Brushed Brass (F)