crosswater

TECHNICAL

RANGE	INSTALLATION TYPE	PRODUCT DESCRIPTION
MPro	Basin	Basin 3 hole set without pop-up waste

CODE			
PRO135DNC			

FINISH	APPLICATION	MIN PRESSURE
Chrome	Electroplating	0.5 bar

HEADWORK	1/2" Ceramic disc/quarter turn
CONNECTIONS	G1/2"
UK APPROVALS	WRAS
OTHER APPROVALS	Na
WARRANTY*	15 Years (5 on cartridges)

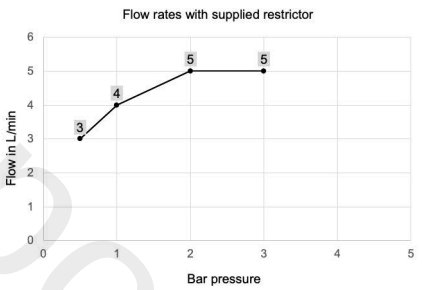

Bar pressure		Flow L/min
Low	0.2	-
Med	0.5	3
High	1	4
	2	5
	3	5
	4	-
	5	-

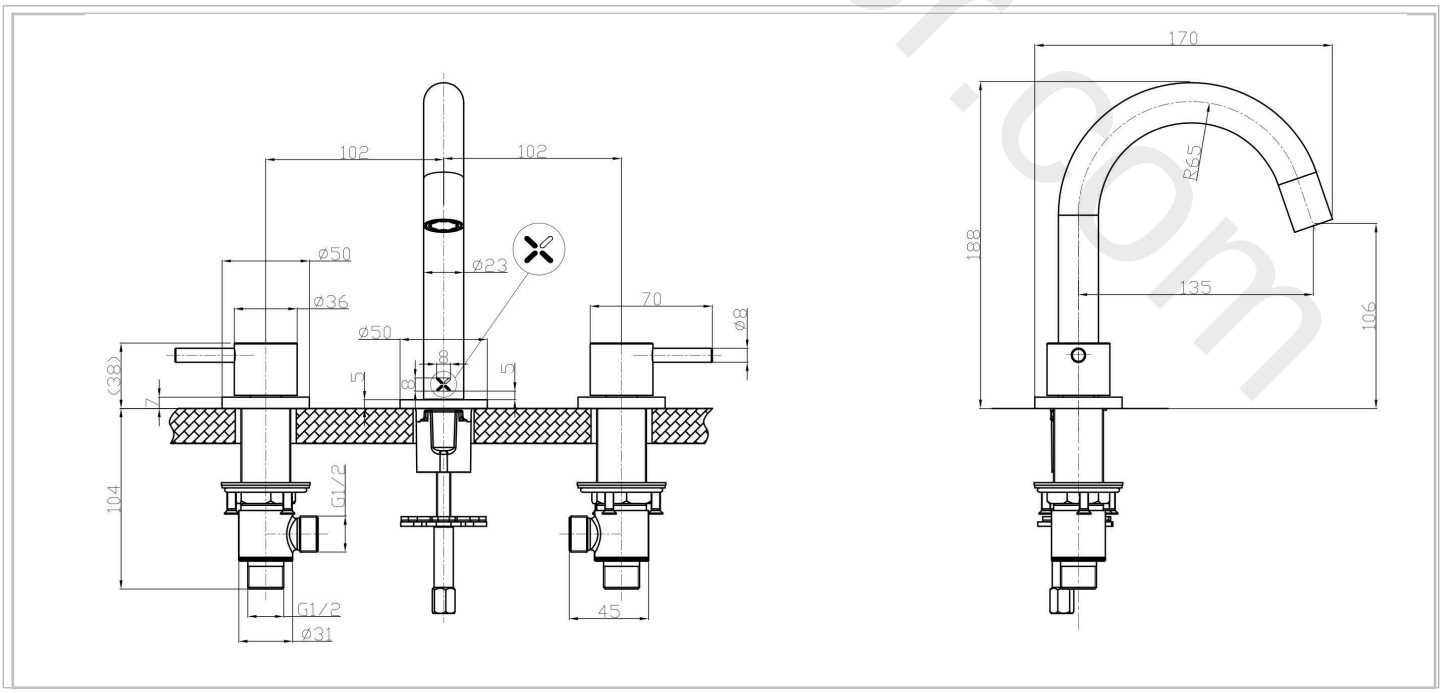

www.divapor.com

Lake View House, Rennie Drive, Dartford, Kent DA1 5FU
Tel: 0345 873 8840 | Email: sales@crosswater.co.uk | crosswater.co.uk