LEFROY BROOKS
IBROC HOUSE ESSEX ROAD
HODDESDON HERTS EN11 OQS UK
T: +44 (0)1992 708 316 F: +44 (0)1992 708 317

MB8803

MACKINTOSH BLACK ARCHIPELAGO THERMOSTATIC VALVE WITH FLOW CONTROLS, HANDSET & SHOWER KIT

DIMENSIONAL DATA SHEET

DATE: 07/08/2020

REVISION: A

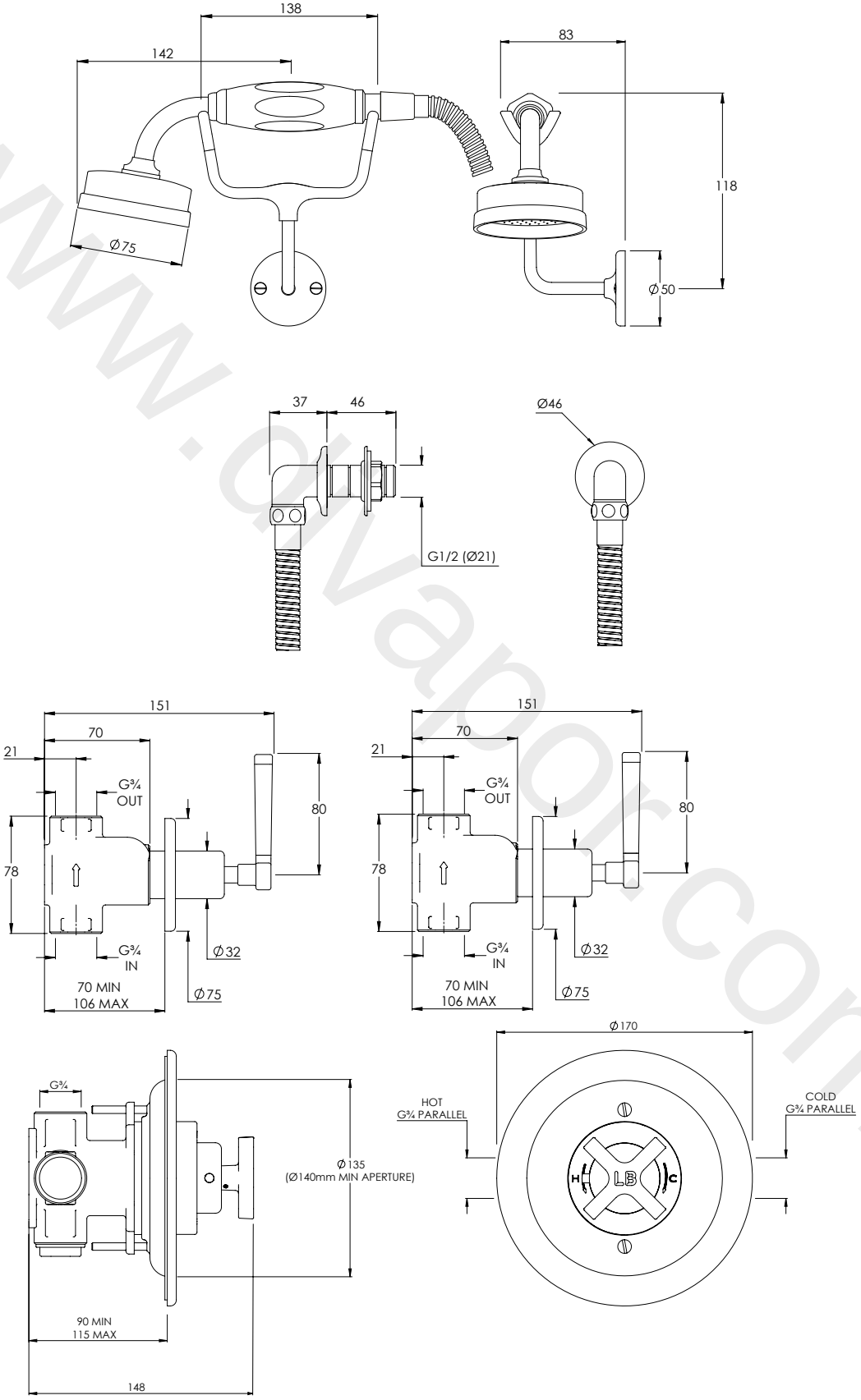

DIMENSIONS IN MILLIMETRES

COPYRIGHT © LBIP LTD. ALL RIGHTS RESERVED

WHILST EVERY EFFORT IS MADE TO ENSURE THE ACCURACY OF THESE DATA SHEETS THEY ARE SUBJECT TO CHANGE WITHOUT NOTICE AS PART OF THE COMPANY'S PRODUCT DEVELOPMENT PROCESS

www.envapor.com