measurements in millimetres (mm)
information updated December 2013

tel | 01322 422767
web | www.crosswater.co.uk
email | technical@crosswater-holdings.co.uk

crosswater
TECHNICAL

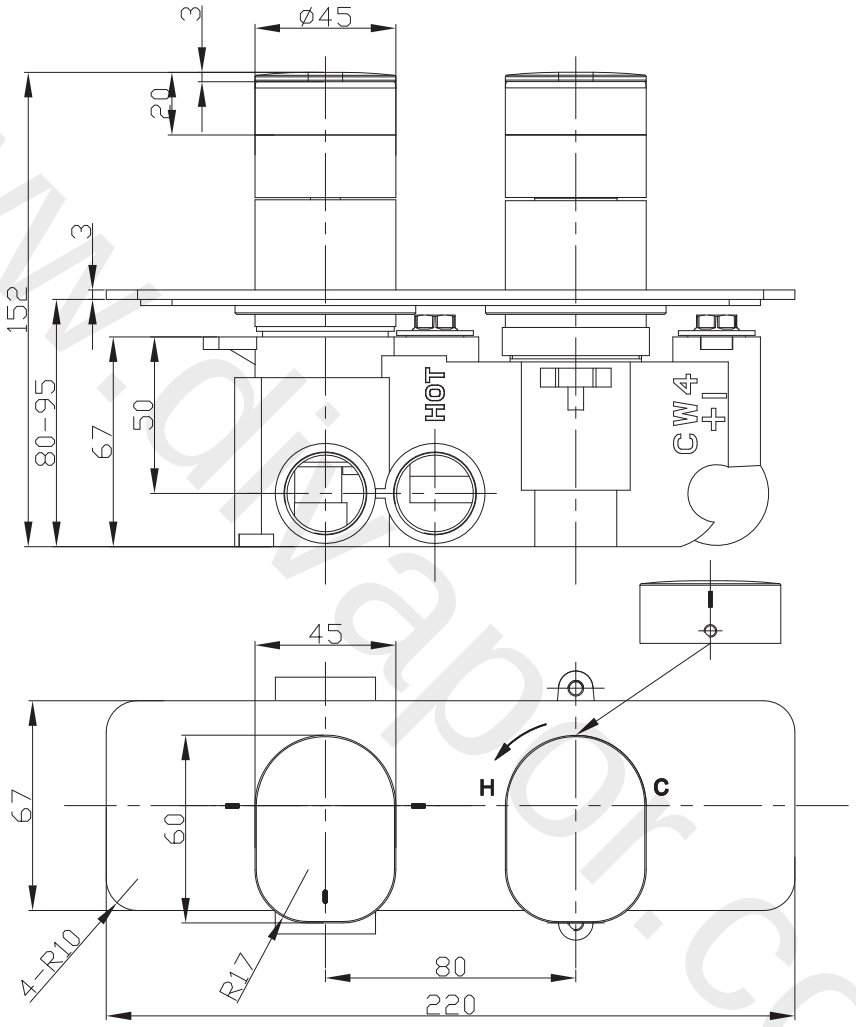

www.diwapor.com

KELLY HOPPEN

Thermostatic Shower Valve Double Outlet

Recessed Wall Mounted

KH02_1501RC

Available in Chrome (C)