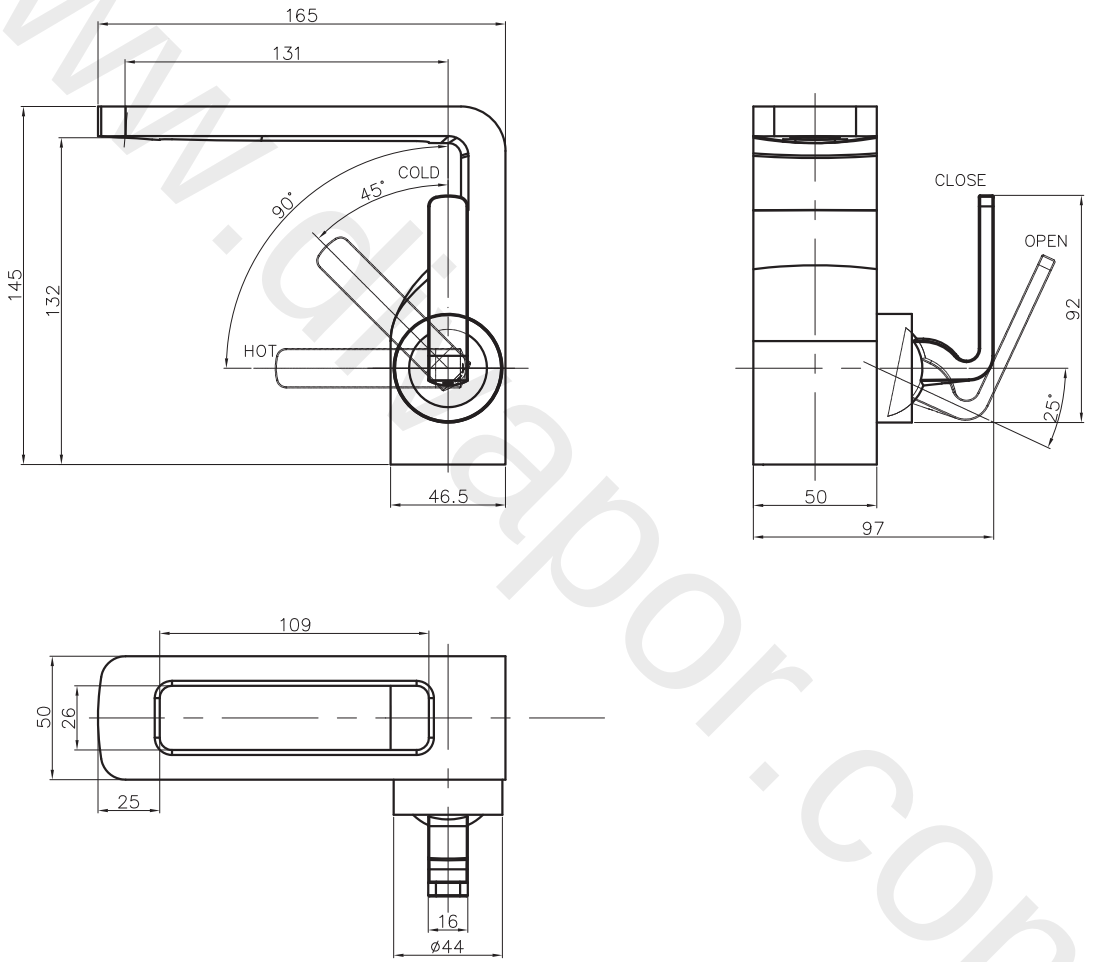

www.ghapor.com

KH01_110DNC

Zero One

Basin Monobloc With No Pop-up Waste