crosswater

This product should only be fitted by a qualified plumber to NVQ (National Vocational Qualification) or SNVQ (Scottish National Vocational Qualification) Level 3. Should the installation be completed by a non-qualified person then the guarantee may be considered invalid.

For a claim made under our warranty written certification of your installers credentials can be required. For further information or to find a qualified installer in your area please visit the Institute of Plumbers website - www.iphe.org.uk

THE QUALIFICATIONS

At present, to be a plumber you need to follow the National Vocational Qualification (NVQ) route (Scottish National Vocational Qualification - SNVQ - in Scotland). These qualifications are made up of theory and practical work in the classroom/purpose built training facility and work based experience with a working plumber. Colleges should help students find a work placement, although many students organise it themselves.

The S/NVQ qualification works in levels. All recently qualified plumbers should hold S/NVQ Level 2 as basic with Level 3 as the preferred level. Level 2 will give you the foundation you need for a career in plumbing and teach you domestic plumbing to a satisfactory level. Level 3 is more comprehensive and deals with domestic, commercial and industrial plumbing along with aspects such as gas - if you want to one day set up your own business, this is the level to reach. The Institute of Plumbing and Heating Engineering, and the industry as a whole recommends that all plumbers reach a minimum of Level 3.

Reaching Level 3 has other advantages. The Institute runs a Master Plumber Certificate, which only those attaining Level 3 or equivalent can reach as long as they have the relevant experience as well. Those with S/NVQ Level 3 can (once in membership with the Institute for five years as a Member MIPHE) gain Engineering Technician EngTech status with the Engineering Council (UK).

For any further information please contact Crosswater on: **0845 873 8840**

Or visit our web-site at www.crosswater.co.uk

The manufacturer reserves the right to make technical modifications without prior notice.

AT12615A66 04-2013

A

Bath Shower mixer - Kit floor standing

ES416FC

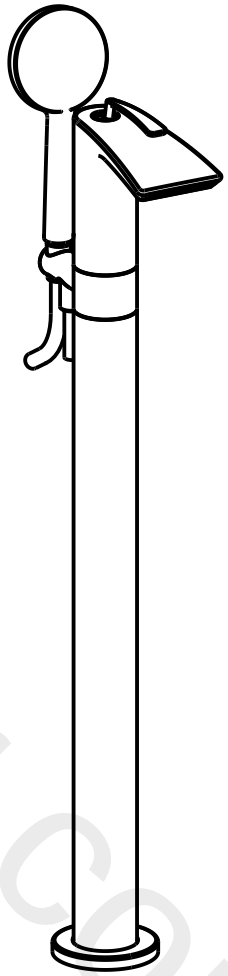

INSTALLATION INSTRUCTIONS

crosswater

www.vivapor.com

INTRODUCTION

Please read these instructions carefully and keep in a safe place for future reference.

General Installation Requirements

The installation must comply with regulations of the Local Water Authority as contained in their bylaws. All of the taps in this range are single flow (the hot and cold water mix in the body) and should therefore be supplied with hot and cold water at balanced pressures, both from the tank or both from the mains (via a combination boiler for example). If the taps are not supplied at balanced pressures then the mixer will not function correctly. It will also be necessary to fit non-return valves on both hot and cold feeds. It is very important that all pipe work is flushed thoroughly after installation to avoid damaging the ceramic discs.

Standard Specifications

1. Recommended working pressure: ..... 3 bar
2. Maximum test pressure: .....16 bar
3. Maximum hot water temperature : ..... 80 °C
4. Recommended temperature: ..... 60÷65 °C
5. Pressure difference between hot and cold water: ..... max. 0,5 BAR
6. We recommend to install filters in the water system and if necessary in the product.
7. Warning :
   - if the above mentioned conditions (see points 1,4,5 and 6) are not observed, the product may not correctly work or not work at all.
   - if during installation, before setting the product on the sanitary fittings, faults due to the special finishing are evident you may require the replacement of the tap.

Approvals

All mixer taps are manufactured complying with requirements of European Standard UNI EN817 : 2008.

Preparation and bylaw requirements

These taps are single flow so the hot and cold water mix in the body. Water bylaws require that where the hot water is supplied from a tank and cold from the mains, non return valves are fitted on both hot and cold pipes as close as possible to the tap. These are not supplied. Where combination boilers are fitted it is only necessary to shut off the incoming mains and turn the boiler off and non return valves are not required.

WARNING

- Installation Performed By Qualified Personnel Only!
- Clean Carefully The Water Pipes Before Installing The Tap.

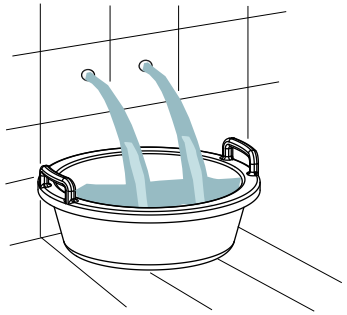

CLEANING

The chrome plate we use on our taps is very durable, nevertheless care should be taken when cleaning them. They should be cleaned only with warm soapy water followed by rinsing with clean water and drying with a soft cloth. All finishes are vulnerable to acid attack and some strong substances such as household cleaners, disinfectants, denture cleaners, hair dyes, wine making and photographic chemicals can cause the surface to go black or peel.

www.dvapor.com

INSTALLATION

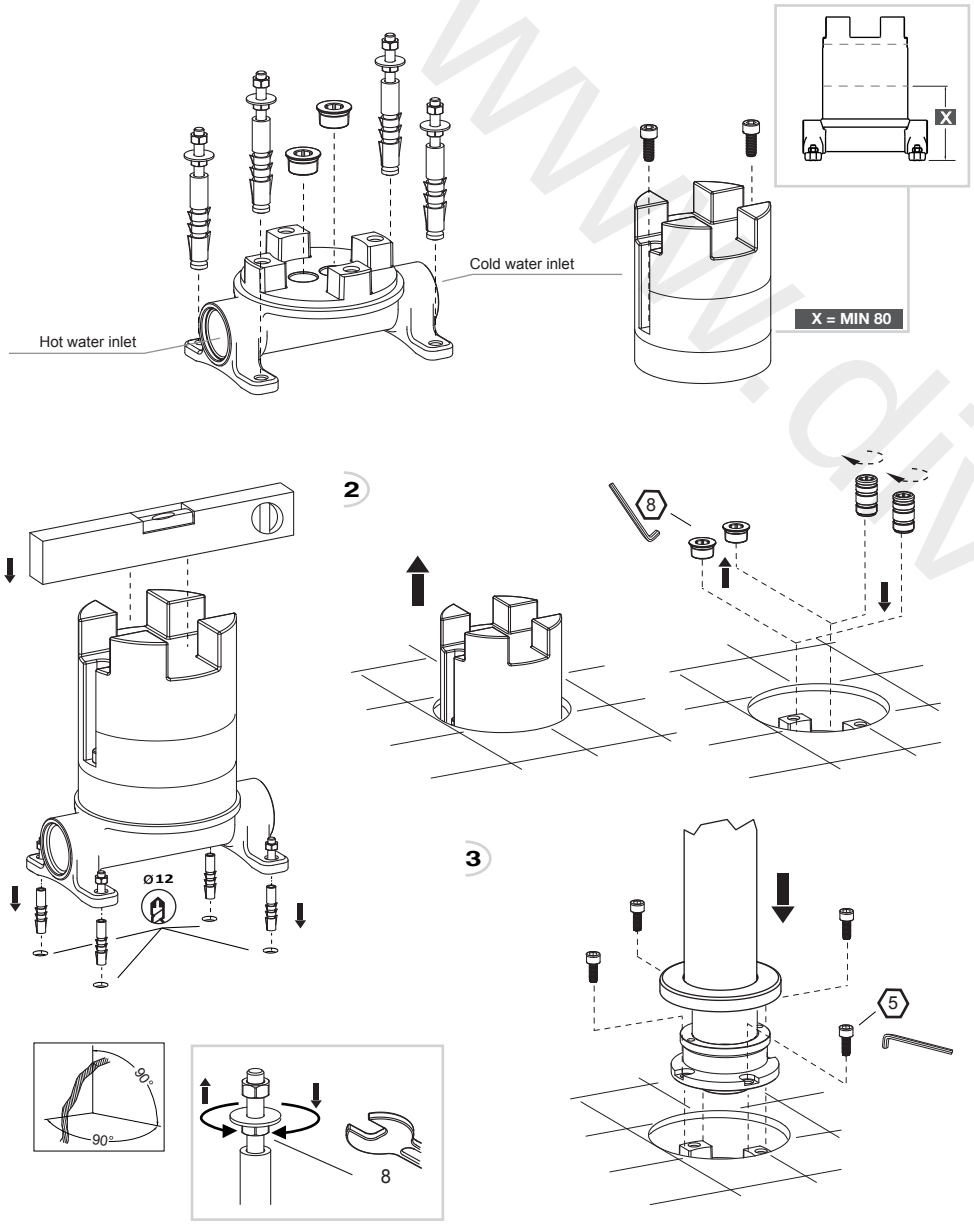

EXPLODED VIEW

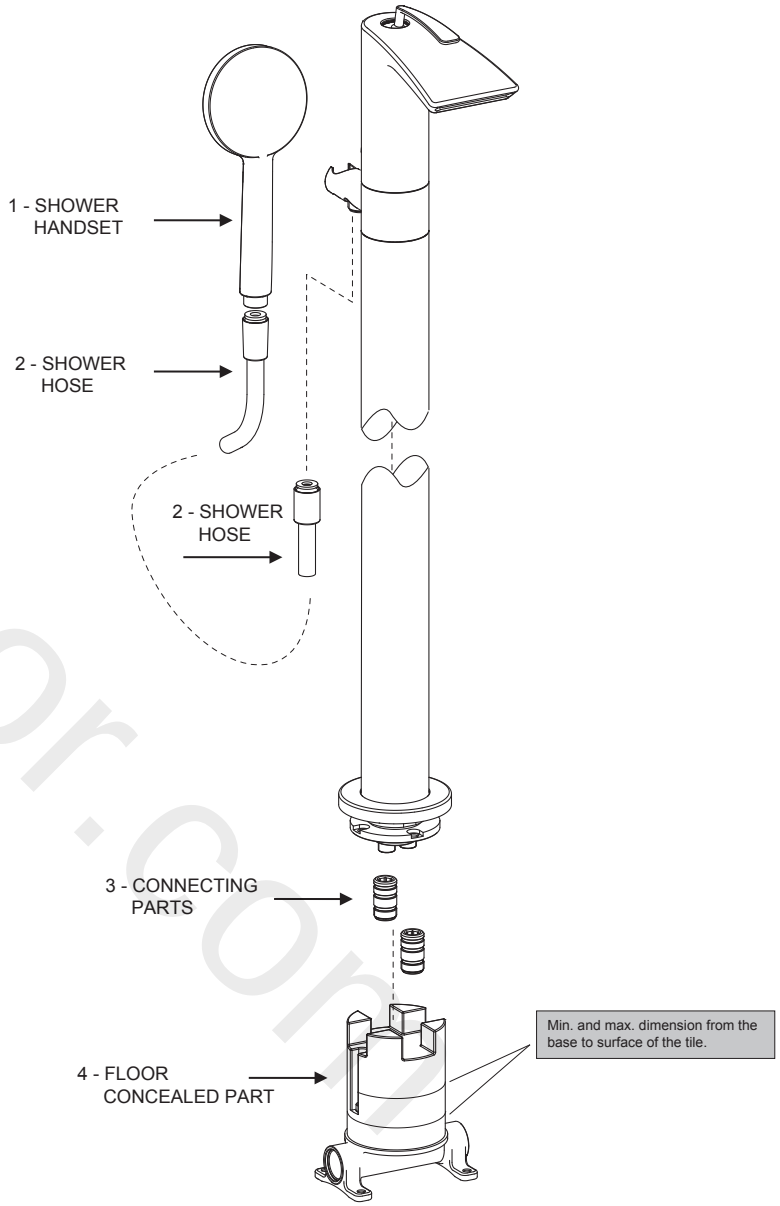

www.divapor.com

MAINTENANCE

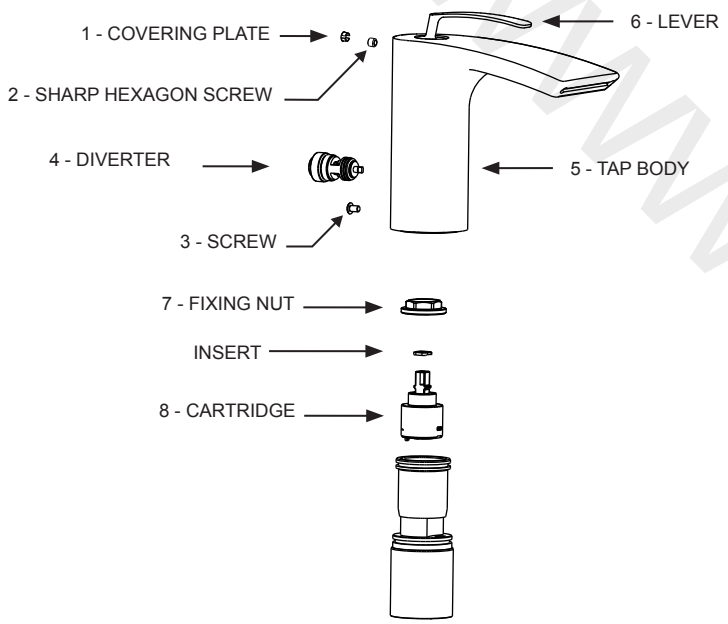

CLEANING THE CARTRIDGE

The concealed cartridge should give trouble free service, but in the event of any problems, servicing is straight forward.

To remove the cartridge.

⚠ **First shut off the water supply to the tap.**

Close the hot and cold water entrances.
Unscrew the screw (3) at the base of the tap body (5) using a 3mm male allen wrench. Remove the covering plate (1) and unscrew the grubscrew using a 2.5mm male allen wrench. Unscrew the diverter (4) using a 16mm male allen wrench. Remove tap body (5) and lever (6) at the same time.
Unscrew the fixing nut (7) with a 27mm male allen wrench. Remove the cartridge (8).
To assemble proceed in the opposite way paying attention that the dowel at the base of the cartridge (8) is correctly positioned in the internal part of the tap body and that its seat is clean. Screw the fixing nut (7) with a 10-12 Nm driving torque.

DIMENSIONS

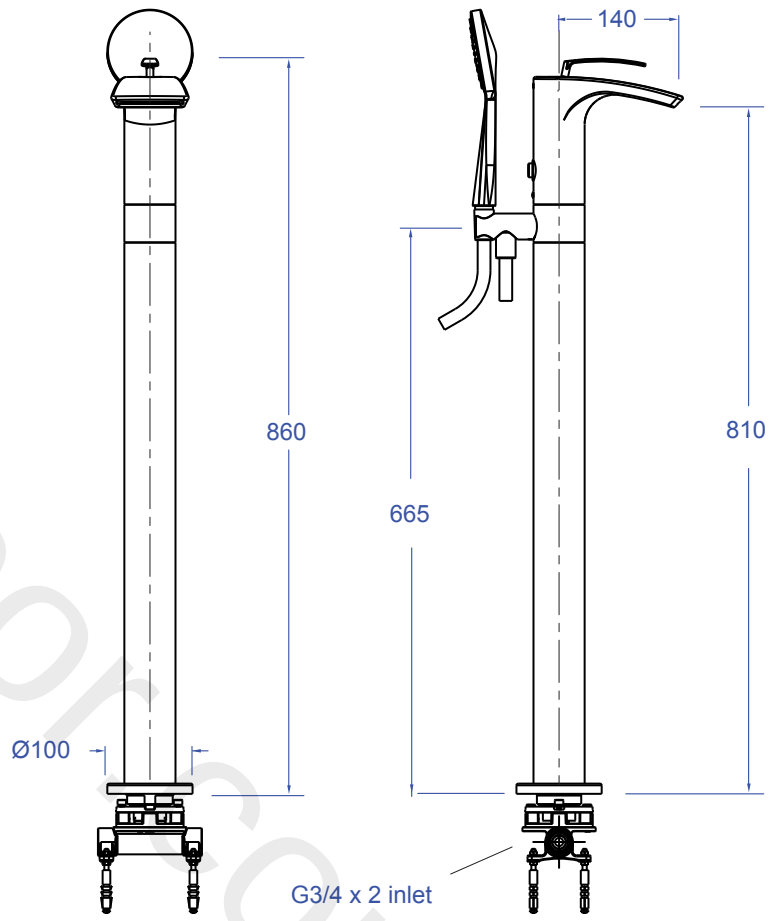

NOTE: ALL DIMENSIONS IN MILLIMETRES

www.divapoor.com