where inspiration flows

This instruction booklet covers model:

ELW-135/NH-CP.

Vado
Wedmore Road, Cheddar, Somerset, England BS27 3EB
tel 01934 744466 fax 01934 744345
aftersales@vado.com
www.vado.com

Version 1, 1-8-21

ELEMENTS

Installation Guide

3 hole bath mixer

ELW-135/NH-CP

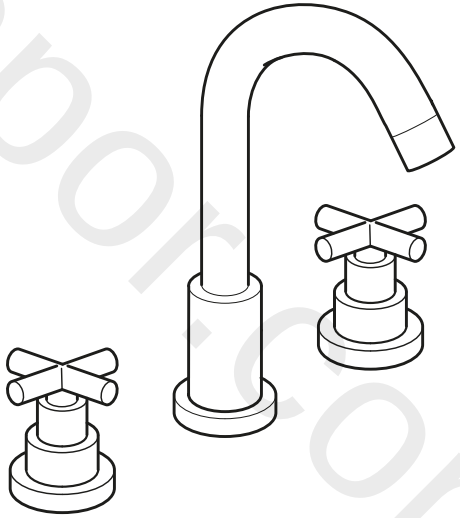

Keep for future reference

www.divaport.com

Important - please read

Please read these instructions carefully before starting installation and keep for future reference.

Remove all packaging and check the product for missing parts or damage before starting installation.

Any alterations made to this product and fittings may infringe water regulations and will invalidate the guarantee.

The installation must comply with all Local/National Water Supply Authority Regulations/Byelaws and Building and Plumbing Regulations.
To be installed in accordance with BS EN806.

We strongly recommend that you use a qualified and registered plumber.

General installation

This fitting is a mixing device and therefore water supplies should be reasonably balanced.

When installed, the fitting must comply with the requirements of the Water Supply (Water Fittings) Regulations 1999 and Scottish Byelaws 2004.
For further information, contact the Water Regulations department of your local water supplier (see the WRAS website www.wras.co.uk for details) or the Water Regulations Advisory Scheme by email (info@wras.co.uk) or telephone: 01495848454.

Before making any inlet pipe connections, all supply pipes MUST be thoroughly flushed to remove debris. Failure to do so could result in damage or low flow from the mixer unit. Water Supply (Water Fittings) Regulations 1999 Schedule 2 Section 13.

The fitting of isolating valves to the inlet feeds is advised for ease of maintenance.

Please take great care when installing this mixer not to damage its surface.

Please note if installing in an enclosed environment, access should be left for servicing and maintenance. No costs relating to inadequate access can be accepted.

Operating Specifications

Operating Pressure

Minimum operating pressure - **0.2 bar**

Maximum operating pressure - **5 bar**

Contents of Packaging

Installation guide & User manual

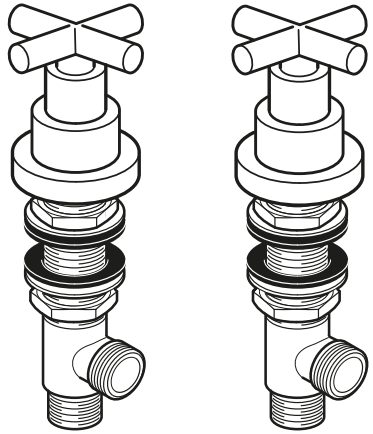

Hot & Cold Valves

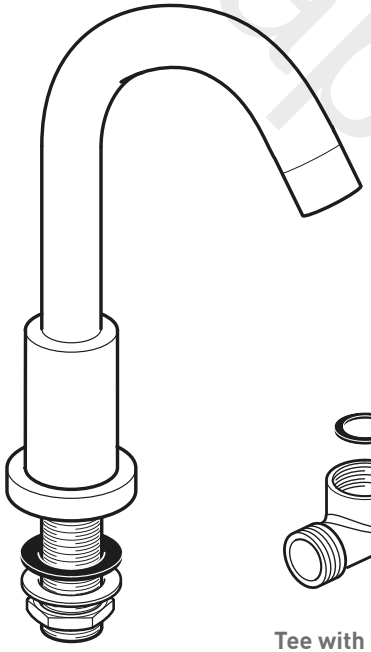

Spout

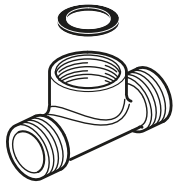

Tee with washer

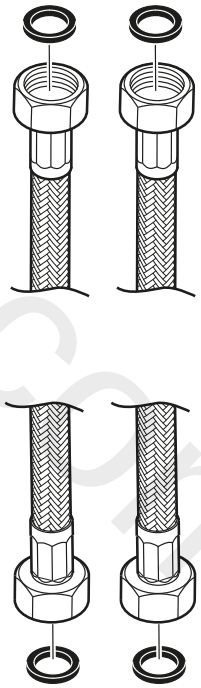

Flexible hoses
with 2 washers x 2

www.divapor.com

Valve dimensions

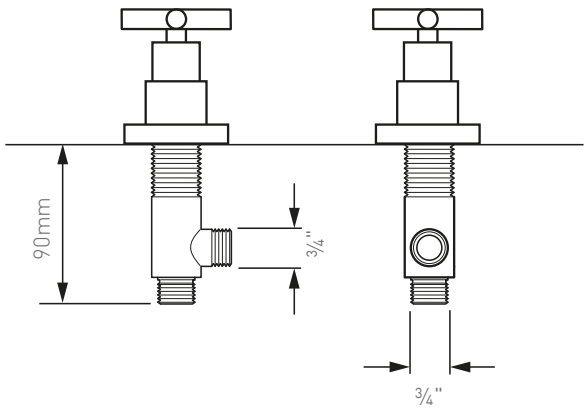

Hot and Cold valves

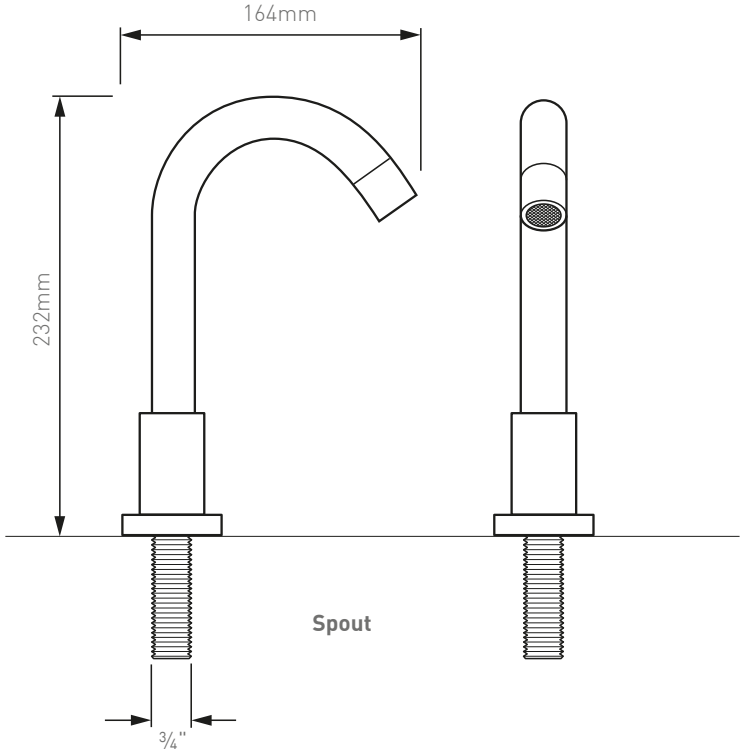

Installation - Quick guide

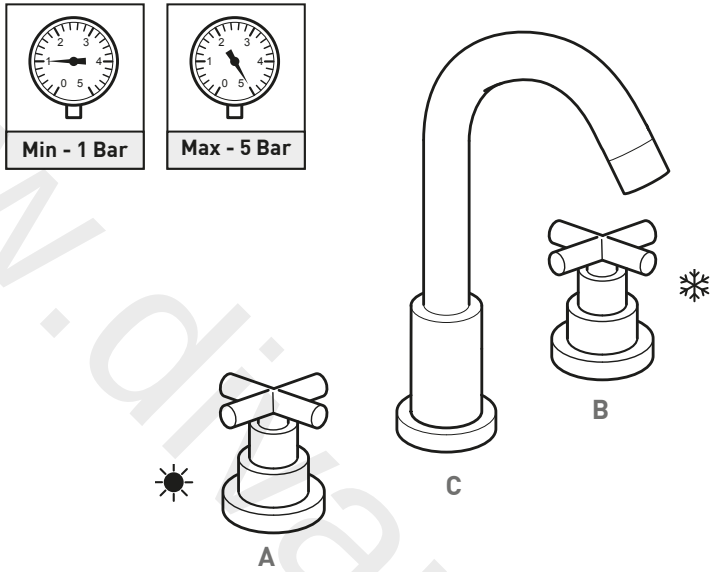

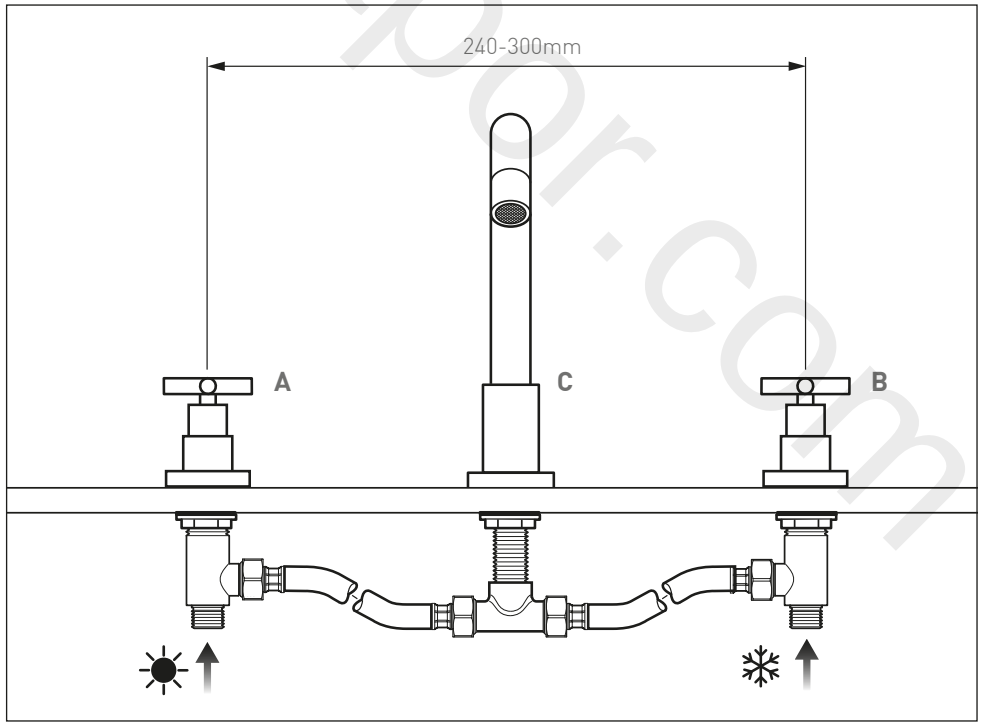

www.diyapar.com

1 A & B

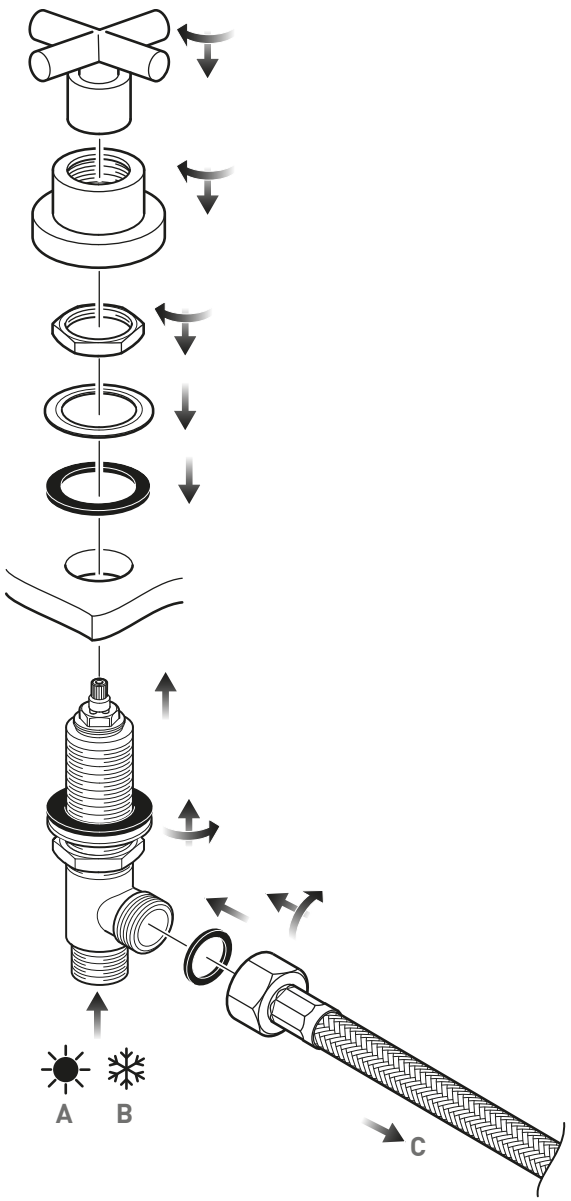

2 C

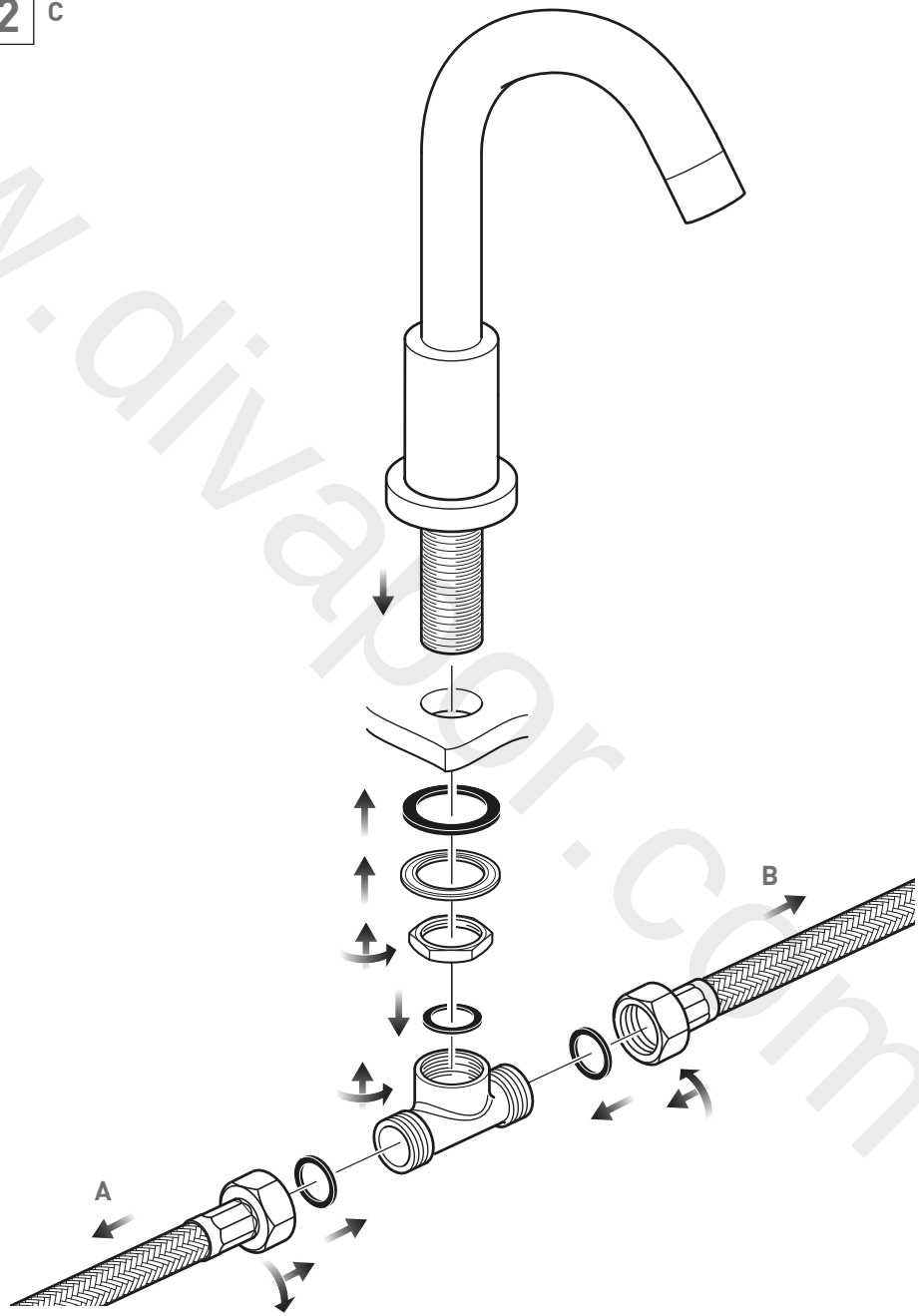

www.divapoor.com

Installation - flow control

Before installing your new tap, flush through the pipe work to ensure removal of debris, turn off the water supply.

Make sure there is a nut, washer and rubber washer in place on the valve. Push the valve up through the hole in the bath making sure the outlet hole is pointing in the right direction.

Slide on a rubber washer, metal washer and then a nut. Tighten the nut to clamp the valve to the bath.

The height of the valve can be adjusted by repositioning the bottom nut and then tightening the top nut.

CAUTION: Do not over tighten the nut as this might damage the bath.

Screw on the cover.
Carefully push the control handle onto the splines of the valve and then screw in the body.

Connect the water supply to the inlet pipes. The hot water should be connected to the left hand tap and cold to the right.

Repeat the same procedure for the other tap.

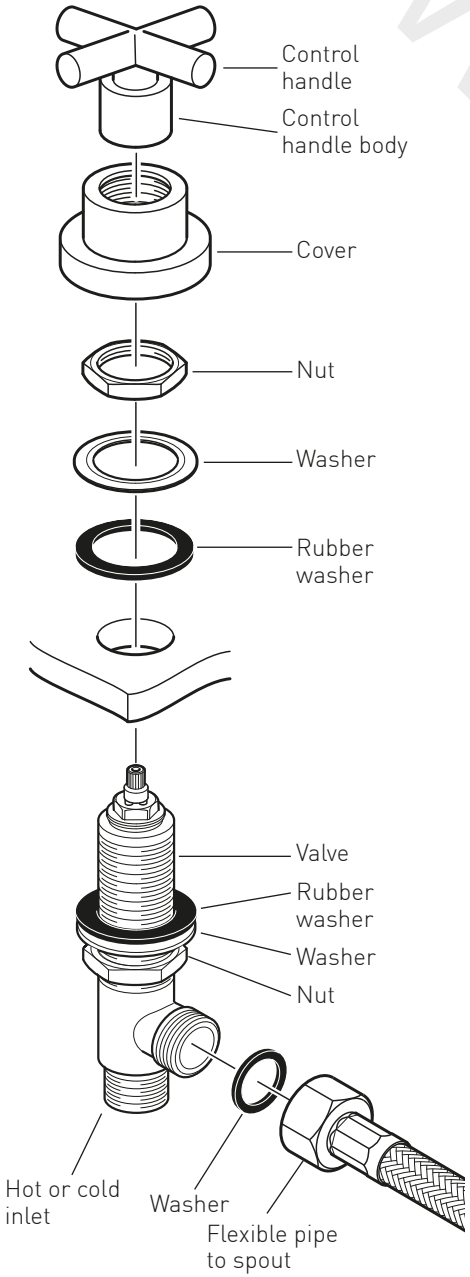

Installation - spout

Position the spout in place, and from the underside slide on the rubber washer, metal washer and then the nut. Tighten the nut to clamp on the spout.

CAUTION: Do not over tighten the nuts.

Place the rubber washer into the tee. Screw onto the spout, try to tighten the tee so the threaded connections are facing the valves or as close to as possible without shearing the washer.

Connect to the taps using the flexible hoses.

CAUTION: When installing the flexible hoses **do not** kink, or bend them more than the 60mm diameter as shown right.

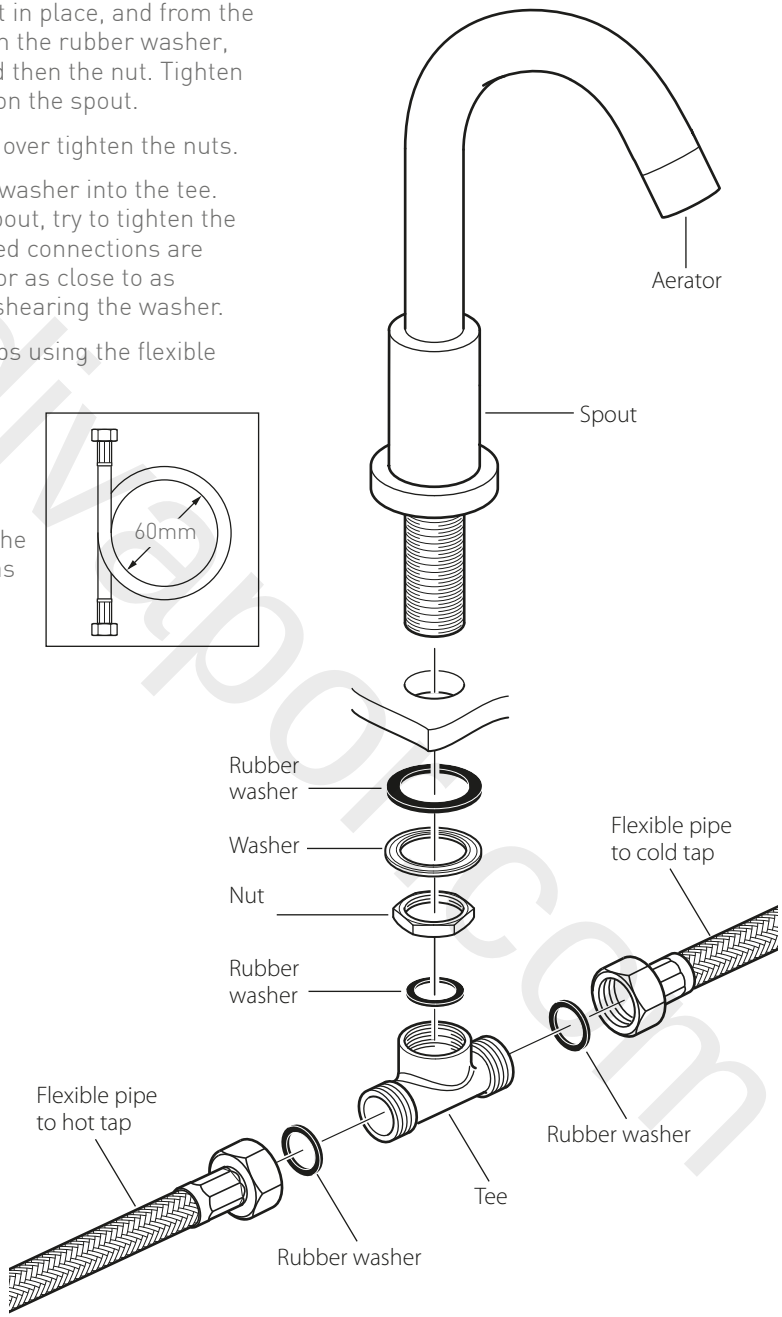

www.diyapps.com

Notes:

Notes:

www.divapor.com