Five-hole bath mixer for deck mounting with diverter

CL.1

ST 030 100 2705

- 200 mm projection
- rectangular spray pattern with 55 individual jets
- height of mixer 125 mm
- height up to aerator 108 mm
- 1/2" connection
- complete hand shower set: normal flow
- complete hand shower set with anti-scale system
- hole diameter spout 35 mm
- hole diameter valve 32 mm
- rosette for complete hand shower set 60 x 60mm
- rosette for deck valve 60 x 60mm
- metal shower hose 2250mm with integrated anti-twist protection
- max. flow 24.6 l/min at 3 bar flow pressure
- max. flow for complete hand shower set 6.8 l/min

Note: Local building codes may require the use of an anti-scald device. Please refer to remote pressure balance valve (35 910 970 90) Intrinsic protection against back flow.

Brushed Dark Platinum	ST 030 100 2705-99
Chrome	ST 030 100 2705-00
Brushed Platinum	ST 030 100 2705-06
Dark Chrome	ST 030 100 2705-19

Individual components of this set

You need the following components for this set

1x 13 612 705-99

1x 20 000 705-99

1x 20 000 706-99

1x 27 702 980-99

1x 29 140 670-99

www.divapor.com

Five-hole bath mixer for deck mounting with diverter

ST 030 100 2705

www.divapor.com

Five-hole bath mixer for deck mounting with diverter

CL.1

ST 030 100 2705

- 200 mm projection
- rectangular spray pattern with 55 individual jets
- height of mixer 125 mm
- height up to aerator 108 mm
- hole diameter 35 mm
- 1/2" connection
- max. flow 24.6 l/min at 3 bar flow pressure

Codes & standards

Brushed Dark Platinum	13 612 705-99
Chrome	13 612 705-00
Brushed Platinum	13 612 705-06
Dark Chrome	13 612 705-19

www.divapor.com

Five-hole bath mixer for deck mounting with diverter

CL.1

ST 030 100 2705

mm [inches]

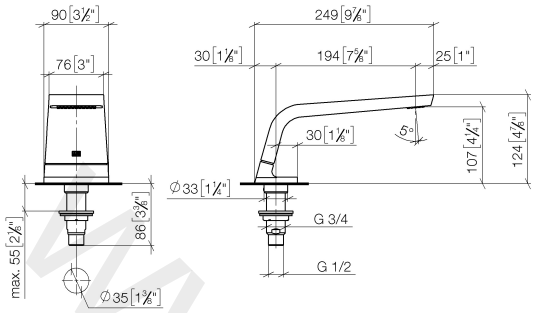

Flow rate chart

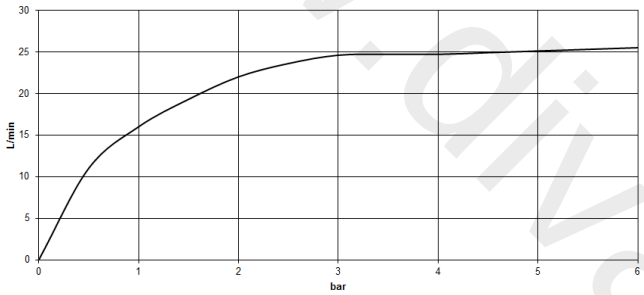

www.dlvapor.com

Five-hole bath mixer for deck mounting with diverter

ST 030 100 2705

Parts for other finishes can be found here: Chrome

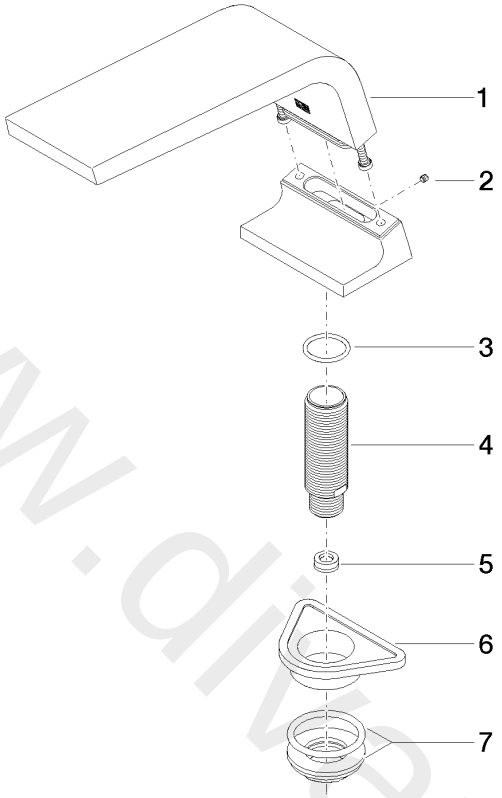

Spare parts list

No.	Item Number	Name	Quantity used	Delivery time
1	90 11 70 007 00-99	spout	1	-
2	09 31 11 099 90	pin	1	2
3	09 14 10 009 90	seal	1	2
4	09 30 01 117 90	connection	1	2
5	09 23 01 057 90	flow reducer	1	2
6	09 18 40 090 90	sleeve	1	2
7	04 23 10 004 03 90	fixing set	1	2

www.divapor.com

Five-hole bath mixer for deck mounting with diverter

CL.1

ST 030 100 2705

- hole diameter valve 32 mm
- rosette 60 x 60 mm
- with cold marking

Codes & standards

Fits CL.1

Brushed Dark Platinum	20 000 705-99
Chrome	20 000 705-00
Brushed Platinum	20 000 705-06
Dark Chrome	20 000 705-19

www.divapor.com

Five-hole bath mixer for deck mounting with diverter

ST 030 100 2705

www.divapor.com

Five-hole bath mixer for deck mounting with diverter

CL.1

ST 030 100 2705

mm [inches]

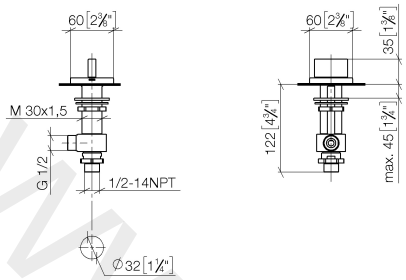

Flow rate chart

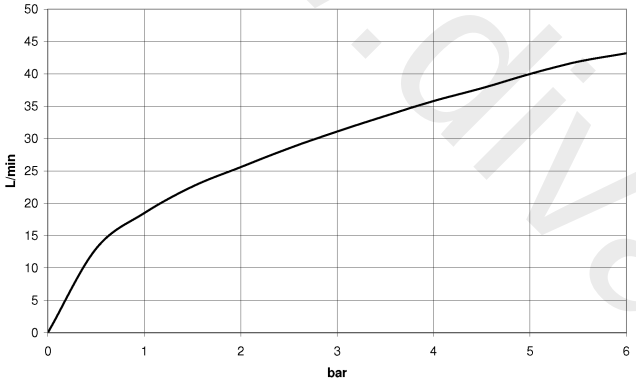

www.divapor.com

Five-hole bath mixer for deck mounting with diverter

ST 030 100 2705

Parts for other finishes can be found here: Chrome

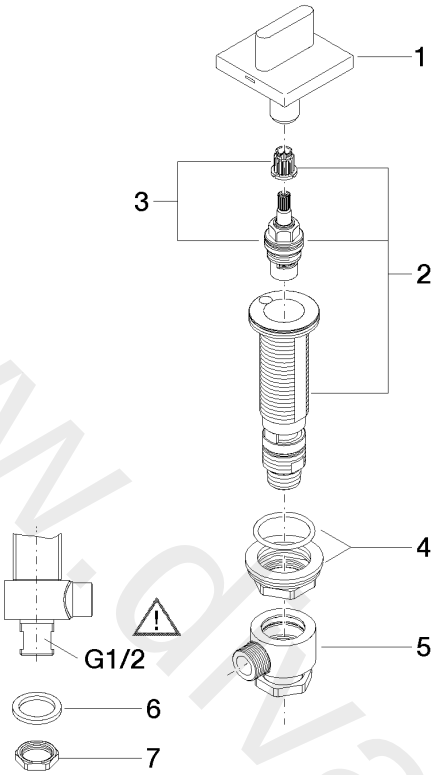

Spare parts list

No.	Item Number	Name	Quantity used	Delivery time
1	90 20 70 051 04-99	handle (cold)	1	30
2	04 17 11 058 33 90	side panel	1	2
3	90 90 03 133 00 90	top	1	2
4	04 23 10 032 78 90	fixing set	1	2
5	04 17 11 023 10 90	distributor	1	2
6	04 23 30 040 00-99	threaded connector	1	30
7	09 30 11 059 90	disc	1	2
8	09 23 10 012 90	nut	1	2

www.drvapor.com

Five-hole bath mixer for deck mounting with diverter

CL.1

ST 030 100 2705

- hole diameter valve 32 mm
- rosette 60 x 60 mm
- with hot marking

Codes & standards

Fits CL.1

Brushed Dark Platinum	20 000 706-99
Chrome	20 000 706-00
Brushed Platinum	20 000 706-06
Dark Chrome	20 000 706-19

www.divapor.com

Five-hole bath mixer for deck mounting with diverter

ST 030 100 2705

www.divapor.com

Five-hole bath mixer for deck mounting with diverter

CL.1

ST 030 100 2705

mm [inches]

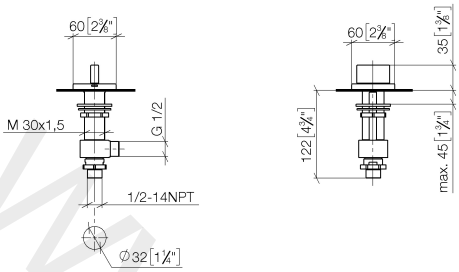

Flow rate chart

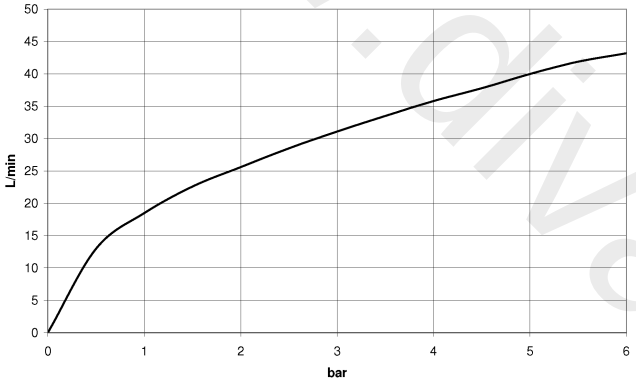

www.divapor.com

Five-hole bath mixer for deck mounting with diverter

ST 030 100 2705

Parts for other finishes can be found here: Chrome

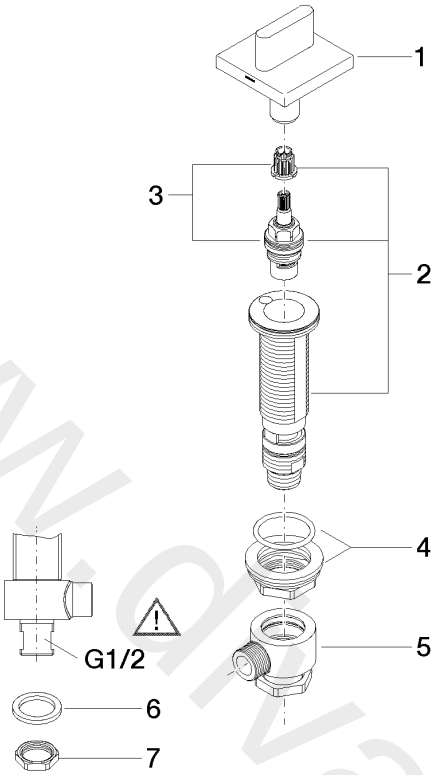

Spare parts list

No.	Item Number	Name	Quantity used	Delivery time
1	90 20 70 051 05-99	handle (hot)	1	30
2	04 17 11 058 32 90	side panel	1	2
3	90 90 03 132 00 90	top	1	2
4	04 23 10 032 78 90	fixing set	1	2
5	04 17 11 023 10 90	distributor	1	2
6	04 23 30 040 00-99	threaded connector	1	30
7	09 30 11 059 90	disc	1	2
8	09 23 10 012 90	nut	1	2

www.drvapor.com

Five-hole bath mixer for deck mounting with diverter

CL.1

ST 030 100 2705

Fits: IMO, MEM, CL.1, CYO

- normal flow
- with anti-scale system
- rosette 60 x 60 mm
- hole diameter 32 mm
- metal shower hose 2250mm with integrated anti-twist protection
- max. flow 6.8 l/min

Codes & standards

Two-piece design allows hose to later be changed without dismantling the fitting.

Intrinsic protection against back flow.

Brushed Dark Platinum	27 702 980-99
Chrome	27 702 980-00
Brushed Platinum	27 702 980-06
Platinum	27 702 980-08
Dark Chrome	27 702 980-19
Brushed Durabrass (23kt Gold)	27 702 980-28
Matte Black	27 702 980-33
Brushed Champagne (22kt Gold)	27 702 980-46
Champagne (22kt Gold)	27 702 980-47
Brushed Chrome	27 702 980-93

www.divapor.com

Five-hole bath mixer for deck mounting with diverter

ST 030 100 2705

www.divapor.com

Five-hole bath mixer for deck mounting with diverter

CL.1

ST 030 100 2705

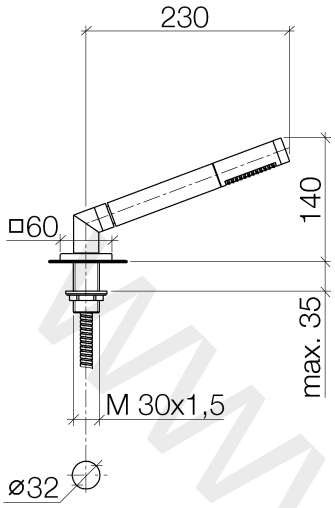

Flow rate chart

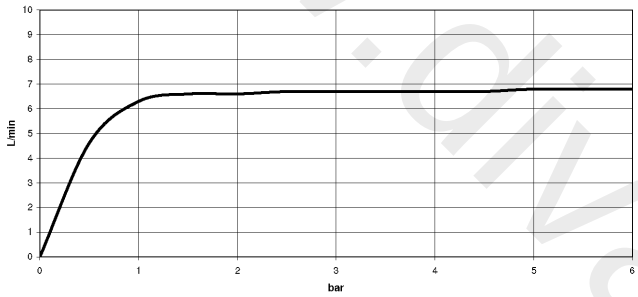

www.diwapor.com

Five-hole bath mixer for deck mounting with diverter

CL.1

ST 030 100 2705

Parts for other finishes can be found here: Chrome

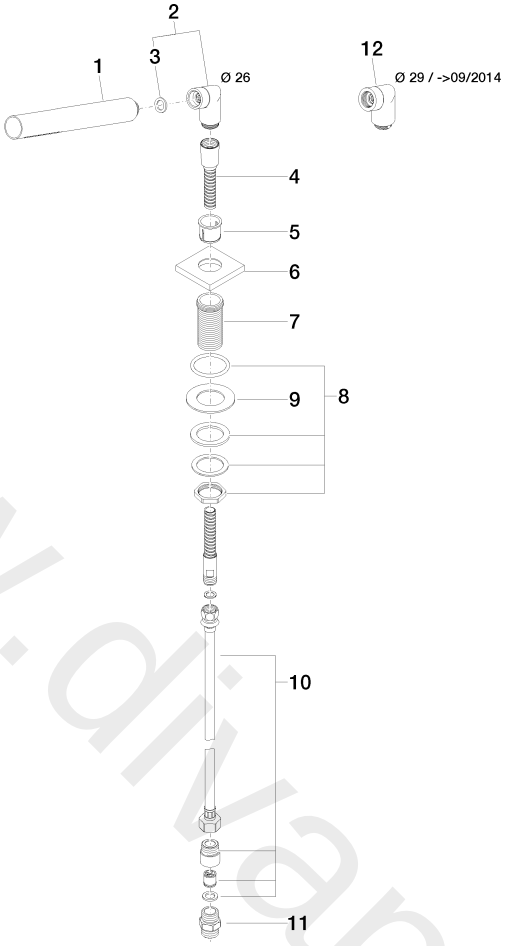

Spare parts list

No.	Item Number	Name	Quantity used	Delivery time
1	90 12 11 140 30-99	shower	1	30
2	04 24 04 287 00-99	nipple	1	30
3	09 14 20 002 90	seal	1	2
4	28 322 970-99	Metal shower hose 1/2" x 3/8" x 1750 mm	1	2
5	09 18 40 085 90	sleeve	1	2
6	09 27 68 003-99	rosette	1	30
7	09 30 01 090-07	sleeve	1	30
8	04 23 10 032 46 90	fixing set	1	2
9	09 30 11 060 90	disc	1	2
10	12 505 970 90	High pressure hose 1/2" x 3/8" x 500 mm	1	2
11	09 24 03 168 10 90	nipple	1	2
12	04 24 04 187 00-99	nipple	1	-

www.divapor.com

Five-hole bath mixer for deck mounting with diverter

CL.1

ST 030 100 2705

Fits: IMO, MEM, CYO

- automatic bath/shower diverter
- hole diameter 32 mm
- rosette 60 x 60 mm
- 1/2" connection
- max. flow 64.9 l/min at 3 bar flow pressure
- WRAS: 1911025

Codes & standards

Brushed Dark Platinum	29 140 670-99
Chrome	29 140 670-00
Brushed Platinum	29 140 670-06
Platinum	29 140 670-08
Dark Chrome	29 140 670-19
Brushed Durabrass (23kt Gold)	29 140 670-28
Brushed Champagne (22kt Gold)	29 140 670-46
Champagne (22kt Gold)	29 140 670-47
Brushed Chrome	29 140 670-93

www.divapor.com

Five-hole bath mixer for deck mounting with diverter

ST 030 100 2705

www.divapor.com

Five-hole bath mixer for deck mounting with diverter

CL.1

ST 030 100 2705

mm [inches]

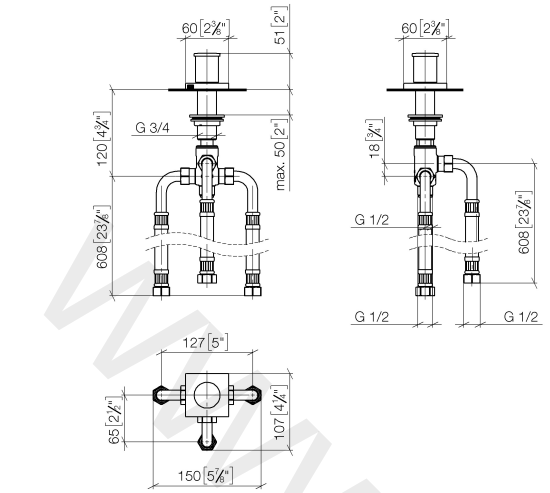

Flow rate chart

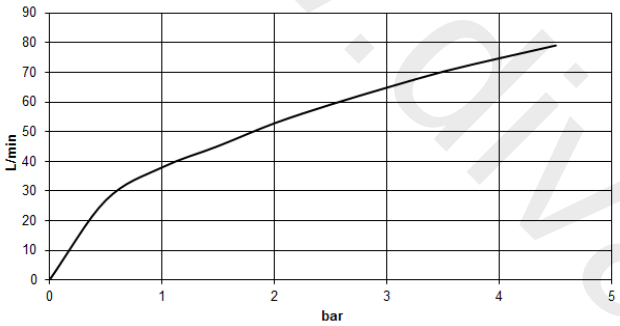

www.divapor.com

Five-hole bath mixer for deck mounting with diverter

CL.1

ST 030 100 2705

Parts for other
finishes can be found
here: Chrome

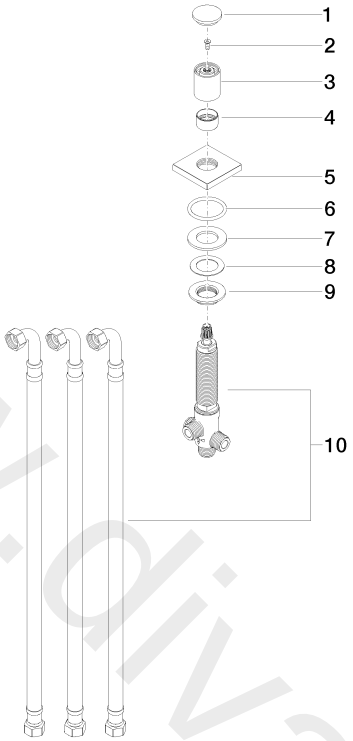

Spare parts list

No.	Item Number	Name	Quantity used	Delivery time
1	09 20 71 003-99	handle	1	30
2	90 30 30 014 00 90	screw	1	2
3	09 20 71 002-99	handle	1	30
4	09 16 01 012-99	ring	1	30
5	09 27 67 006-99	rosette	1	30
6	09 14 10 043 90	seal	1	2
7	09 14 05 014 90	seal	1	2
8	09 14 40 002 90	seal	1	2
9	09 23 10 004 90	nut	1	2
10	90 17 09 051 00 90	diverter	1	2

www.divapor.com