Deck valve clockwise closing

CYO

20 000 811

- hole diameter valve 32 mm
- without rosette
- handle Ø 60mm

NOTE: The handle inserts must be ordered separately from the fittings!

Brushed Dark Platinum	20 000 811-99
Chrome	20 000 811-00
Brushed Platinum	20 000 811-06
Dark Chrome	20 000 811-19
Brushed Durabrass (23kt Gold)	20 000 811-28
Platinum / Brushed Platinum	20 000 811-36
Durabrass / Brushed Durabrass (23kt Gold)	20 000 811-38

www.divapor.com

Deck valve clockwise closing

CYO

20 000 811

mm [inches]

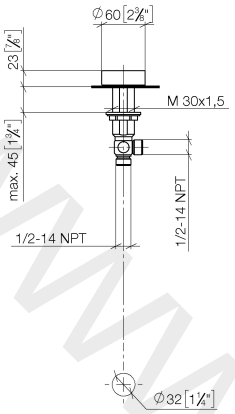

www.divapor.com

Deck valve clockwise closing

CYO

20 000 811

Parts for other
finishes can be found
here: Chrome

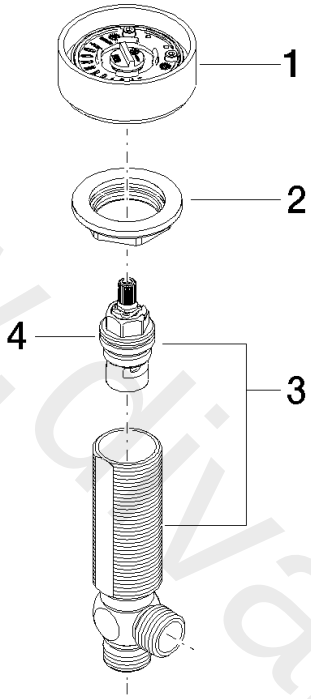

Spare parts list

No.	Item Number	Name	Quantity used	Delivery time
2	90 18 40 291 01-99	handle	1	30
3	04 30 11 038 68 90	fixing set	1	2
4	04 17 11 055 61 90	side panel	2	2

www.divapor.com