xTOOL Thermostat module with 1 valve

TARA

ST 060 114 9892

- cover plate Ø 123 mm
- rosette Ø 60 mm
- temperature control handle with safety limit stop at 38°C
- thermostat cartridge
- head part with cut-to-length spindle and sleeve

Platinum	ST 060 114 9892-08
Chrome	ST 060 114 9892-00
Brushed Platinum	ST 060 114 9892-06
Matte White	ST 060 114 9892-10
Dark Chrome	ST 060 114 9892-19
Brushed Durabrass (23kt Gold)	ST 060 114 9892-28
Matte Black	ST 060 114 9892-33
Brushed Champagne (22kt Gold)	ST 060 114 9892-46
Champagne (22kt Gold)	ST 060 114 9892-47
Brushed Chrome	ST 060 114 9892-93
Brushed Dark Platinum	ST 060 114 9892-99

Individual components of this set

You need the following components for this set

1x 36 607 892-08

1x 36 501 892-08

www.divapor.com

ST 060 114 9892

www.divapor.com

xTOOL Thermostat module with 1 valve

TARA

ST 060 114 9892

- rosette Ø 55 mm
- head part with cut-to-length spindle and sleeve

Codes & standards

Fits TARA

Fits TARA

Platinum	36 607 892-08
Chrome	36 607 892-00
Brushed Platinum	36 607 892-06
Matte White	36 607 892-10
Dark Chrome	36 607 892-19
Brushed Durabrass (23kt Gold)	36 607 892-28
Matte Black	36 607 892-33
Brushed Champagne (22kt Gold)	36 607 892-46
Champagne (22kt Gold)	36 607 892-47
Brushed Chrome	36 607 892-93
Brushed Dark Platinum	36 607 892-99

Required miscellaneous

Wall valve 1/2" 35 607 970 90
- min. recess depth 85 mm
- max. recess depth 145 mm

www.divapor.com

xTOOL Thermostat module with 1 valve

ST 060 114 9892

mm [inches]

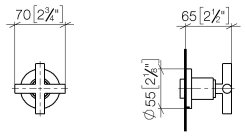

www.divapor.com

xTOOL Thermostat module with 1 valve

ST 060 114 9892

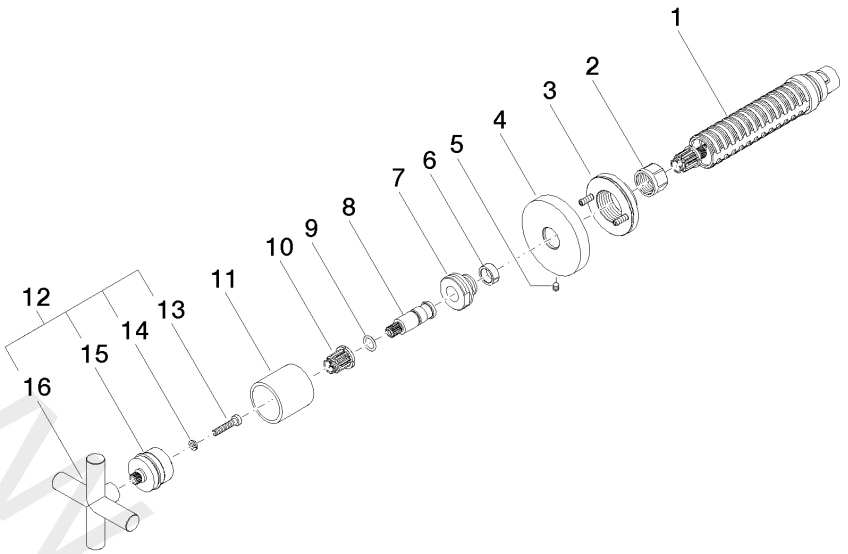

Spare parts list

No.	Item Number	Name	Quantity used	Delivery time
1	90 90 03 143 00 90	top	1	2
2	09 23 30 023 90	nut	1	2
3	90 21 02 108 00 90	disc	1	2
4	09 27 89 108-08	rosette	1	20
5	09 31 11 007 90	pin	1	2
6	09 14 15 020 90	ring	1	2
7	09 24 05 002 90	nipple	1	2
8	09 29 06 022 90	spindle	1	2
9	09 14 10 060 90	seal	1	2
10	90 12 12 002 00 90	fixing cap	1	2
11	09 21 02 144-08	sleeve	1	20
12	04 20 89 010 00-08	handle	1	60
13	09 30 30 075 90	screw	1	2
14	09 30 11 029 90	disc	1	2
15	90 12 12 007 00-08	base	1	20
16	09 20 89 010-08	handle	1	20

www.divapor.com

xTOOL Thermostat module with 1 valve

TARA

ST 060 114 9892

- cover plate Ø 123 mm
- temperature control handle with safety limit stop at 38°C
- thermostat cartridge

Platinum	36 501 892-08
Chrome	36 501 892-00
Brushed Platinum	36 501 892-06
Matte White	36 501 892-10
Dark Chrome	36 501 892-19
Brushed Durabrass (23kt Gold)	36 501 892-28
Matte Black	36 501 892-33
Brushed Champagne (22kt Gold)	36 501 892-46
Champagne (22kt Gold)	36 501 892-47
Brushed Chrome	36 501 892-93
Brushed Dark Platinum	36 501 892-99

Required miscellaneous

xTOOL Concealed thermostat module without volume control 35 503 970 90
- min. recess depth 95 mm
- max. recess depth 160 mm

Required miscellaneous

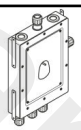

Drybox Thermostat module without volume control 39 503 970 90

Recommended miscellaneous

xGRID Attachment set for integrating in the dry wall construction 12 340 970 90

Required miscellaneous

xGRID Installation track 555 mm 12 360 970 90

www.diyappor.com

ST 060 114 9892

www.divapor.com

xTOOL Thermostat module with 1 valve

ST 060 114 9892

mm [inches]

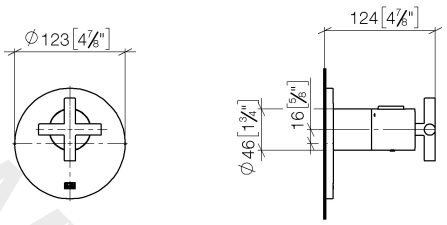

www.divapor.com

xTOOL Thermostat module with 1 valve

ST 060 114 9892

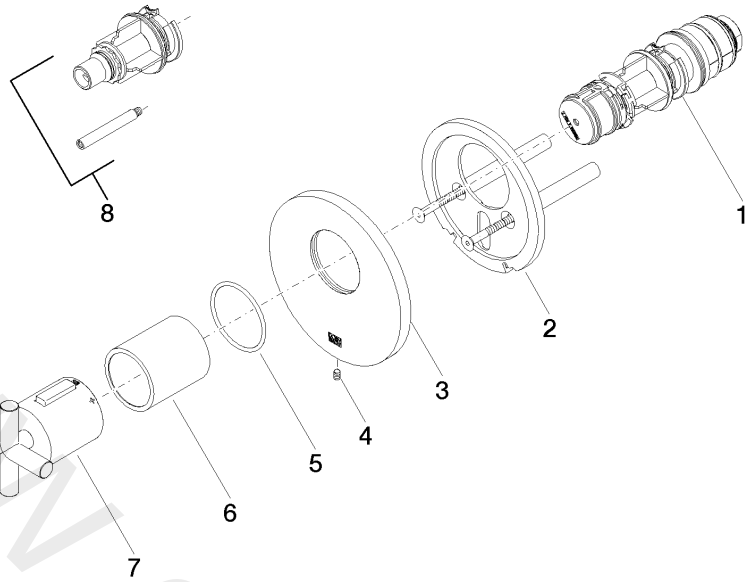

Spare parts list

No.	Item Number	Name	Quantity used	Delivery time
1	90 15 02 063 00 90	cartridge	1	2
2	90 11 01 196 00 90	base	1	2
3	09 11 02 537-08	cover	1	20
4	09 31 11 048 90	pin	1	2
5	09 14 10 049 90	seal	1	2
6	09 21 02 112-08	sleeve	1	20
7	90 17 33 027 00-08	handle	1	20
8	12 178 970 90	Extension 46 mm	1	2

www.divapor.com