measurements in millimetres (mm)
information updated december 2013

tel | 01322 422767
web | www.crosswater.co.uk
email | technical@crosswater-holdings.co.uk

crosswater
TECHNICAL

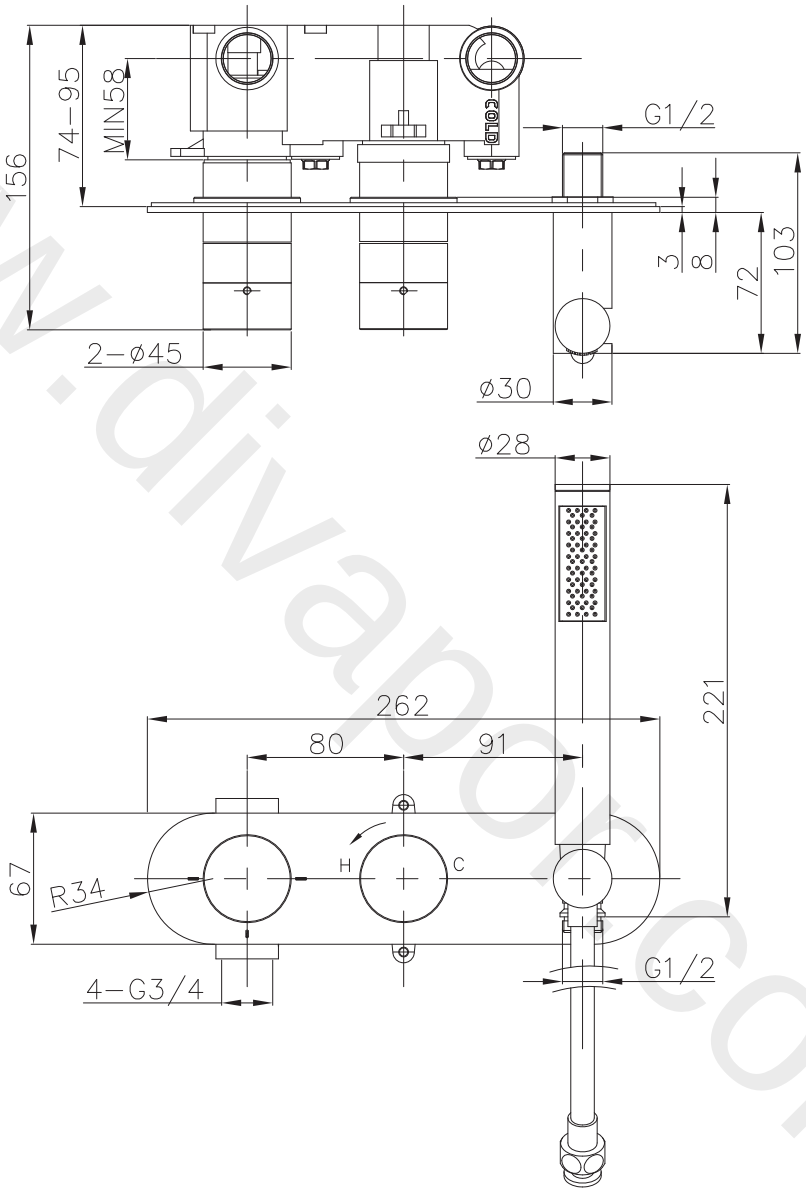

www.divaapp.com

Thermostatic Shower Valve 2 Way With Handset

Wall Mounted

CE1701RC

Available in Chrome (C)