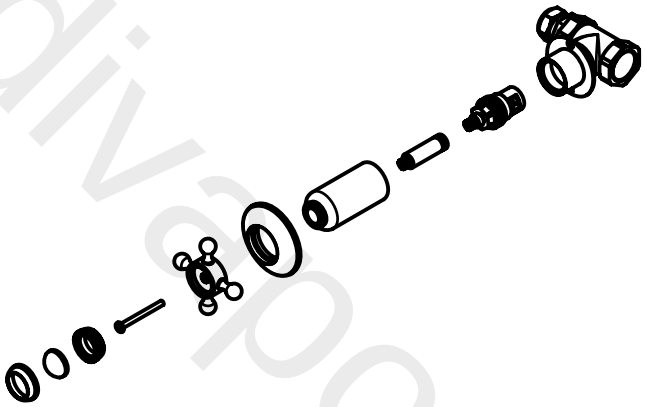

Wall Stop Taps - BL350WC

www.divapor.com