ALPHA

BC489AA

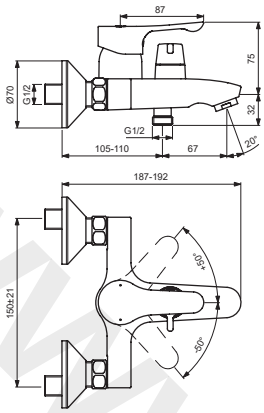

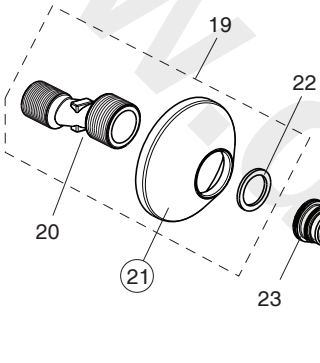

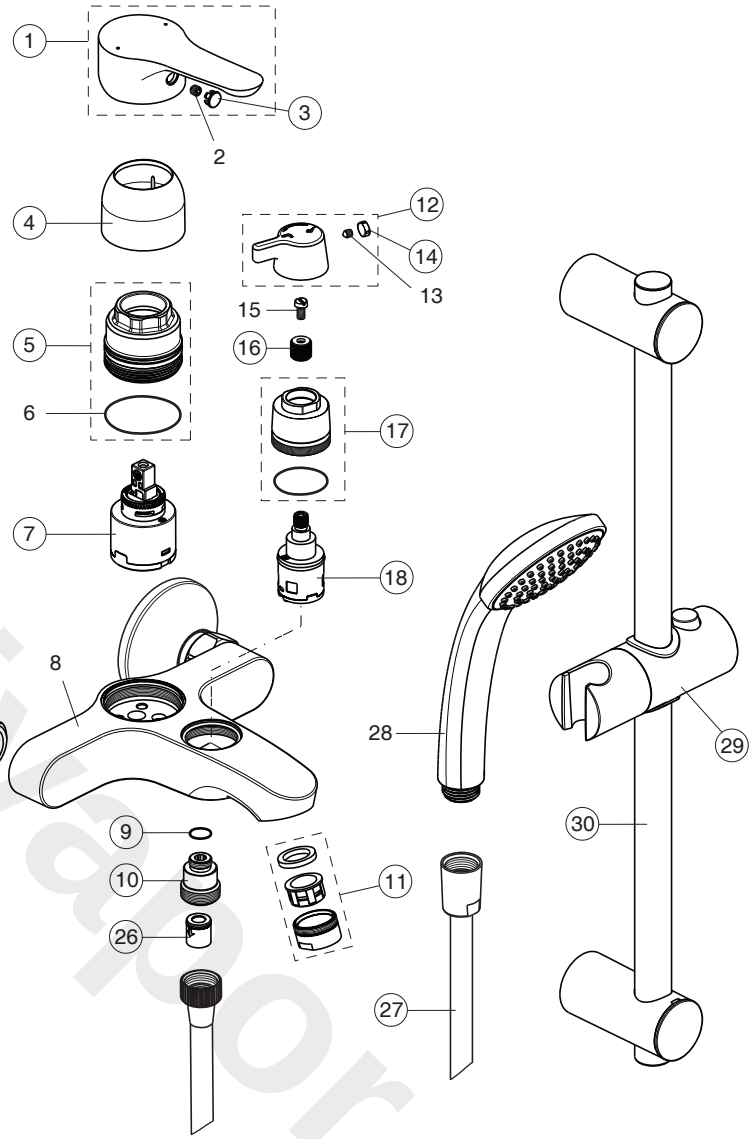

BC656AA

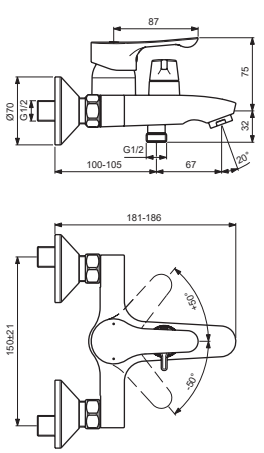

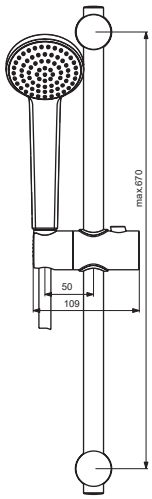

Pos.	Signify	Spare parts-Nr.	Quantity	Pos.	Signify	Spare parts-Nr.	Quantity
1	Lever,w/logo-set	B961564AA	1 Pcs.	17	Screw M32x1	B961389AA	1 Pcs.
2	Screw M5x6		1 Pcs.	18	Diverter cartr. Ø25-5	B961233NU	1 Pcs.
3	Cap decorative	B964696NU	1 Pcs.	19	S-connection-compl.		1 Pcs.
4	Rosette	B961229AA	1 Pcs.	20	S-connector G3/4		2 Pcs.
5	Screw M42x1.5	B961230NU	1 Pcs.	21	Rosette	A963489AA	1 Pcs.
6	O-Ring Ø39.1x1.3		1 Pcs.	22	Fiber ring		2 Pcs.
7	Cartridge Ø35mm,w/click	B961478NU	1 Pcs.	23	Nipple M19x1.5LH		2 Pcs.
8	Body bath/shower		1 Pcs.	24	O-Ring Ø15.6x1.78		2 Pcs.
9	O-Ring Ø10x1.5	B960645NU	1 Pcs.	25	Coupling nut		2 Pcs.
10	Nipple G1/2-M12x1	B960646AA	1 Pcs.	26	Non return valve	B961346NU	1 Pcs.
11	Perlator M24x1-D	A960537AA	1 Pcs.	27	Sh.hose L1500mm-compl.	B960604AA	1 Pcs.
12	Diverter handle	B961283AA	1 Pcs.	28	Handspray 1F,80mm		1 Pcs.
13	Screw M4x5		1 Pcs.	29	Slider set	B960976AA	1 Pcs.
14	Rubber cap Ø8.1x3	B960583NU	1 Pcs.	30	Shower bar set L720mm	B9421AA	1 Pcs.
15	Screw M4x8		1 Pcs.				
16	Insert	B961326NU	1 Pcs.				

www.divapoor.com