Article Number BC116

CERAPLUS 2

Exposed basin mixer with 200 mm cast spout

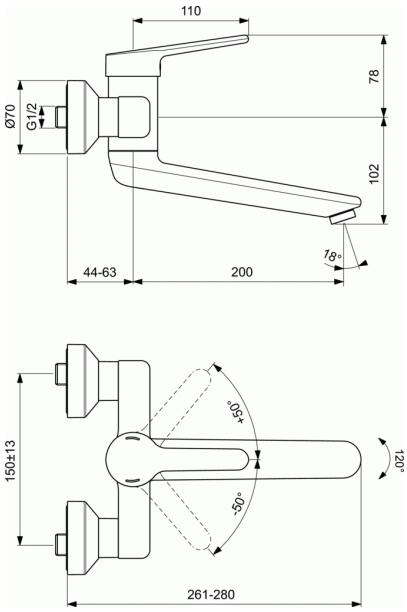

Exposed basin mixer with 200 mm cast spout
Brass cast body with inclined self-draining cast spout
Fixed/Swivelling spout, length 200 mm
Metal handle with red and blue colour indication - printed on handle, 110 mm
Low-aerosol flow straightener in vandal proof housing
Key for antivandal flow straightener in the box
38 mm cartridge HWTC
Covered S-Connectors
Noise Class 1
Comply with EN817
All materials used in contact with drinking water are in accordance with KTW, ACS and WRAS requirements

FINISHES*

AA

* AA = Chrome

www.divapor.com