KEEP FOR FUTURE REFERENCE

AXCES by VADO

IRLO

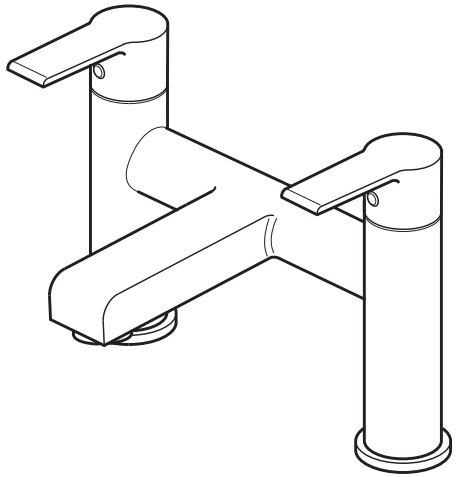

This instruction booklet covers model:

AX-IRO-137-CP

INSTALLATION /
USER MANUAL

VADO
Wedmore Road, Cheddar,
Somerset, England BS27 3EB
tel 01934 744466
fax 01934 744345
www.vado.com
sales@vado.com

Version 1, 1-8-19

BATH FILLER

AXCES by VADO

www.divapor.com

Important - please read

Please read these instructions carefully before starting installation and keep for future reference.

Remove all packaging and check the product for missing parts or damage before starting installation.

Any alterations made to this product and fittings may infringe water regulations and will invalidate the guarantee.

The installation must comply with all Local/National Water Supply Authority Regulations/Byelaws and Building and Plumbing Regulations.
To be installed in accordance with BS EN806.

We strongly recommend that you use a qualified and registered plumber.

General installation

This fitting is a mixing device and therefore water supplies should be reasonably balanced.

When installed, the fitting must comply with the requirements of the Water Supply (Water Fittings) Regulations 1999 and Scottish Byelaws 2004.
For further information, contact the Water Regulations department of your local water supplier (see the WRAS website www.wras.co.uk for details) or the Water Regulations Advisory Scheme by email (info@wras.co.uk) or telephone: 01495848454.

Before making any inlet pipe connections, all supply pipes MUST be thoroughly flushed to remove debris. Failure to do so could result in damage or low flow from the mixer unit. Water Supply (Water Fittings) Regulations 1999 Schedule 2 Section 13.

The fitting of isolating valves to the inlet feeds is advised for ease of maintenance.

Please take great care when installing this mixer not to damage its surface.

Please note if installing in an enclosed environment, access should be left for servicing and maintenance. No costs relating to inadequate access can be accepted.

Operating Specifications

Operating Pressure

Minimum operating pressure **0.2 bar**

Maximum operating pressure **5 bar**

Contents of Packaging

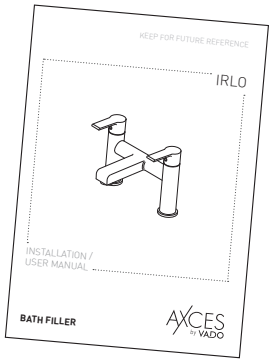

Installation guide & User manual

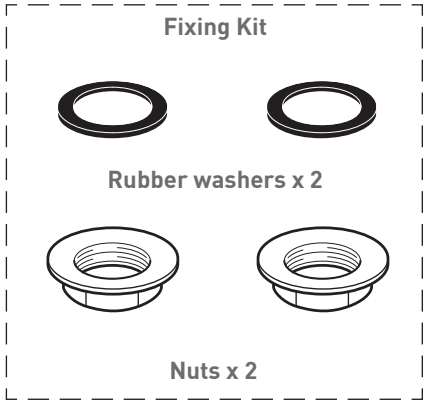

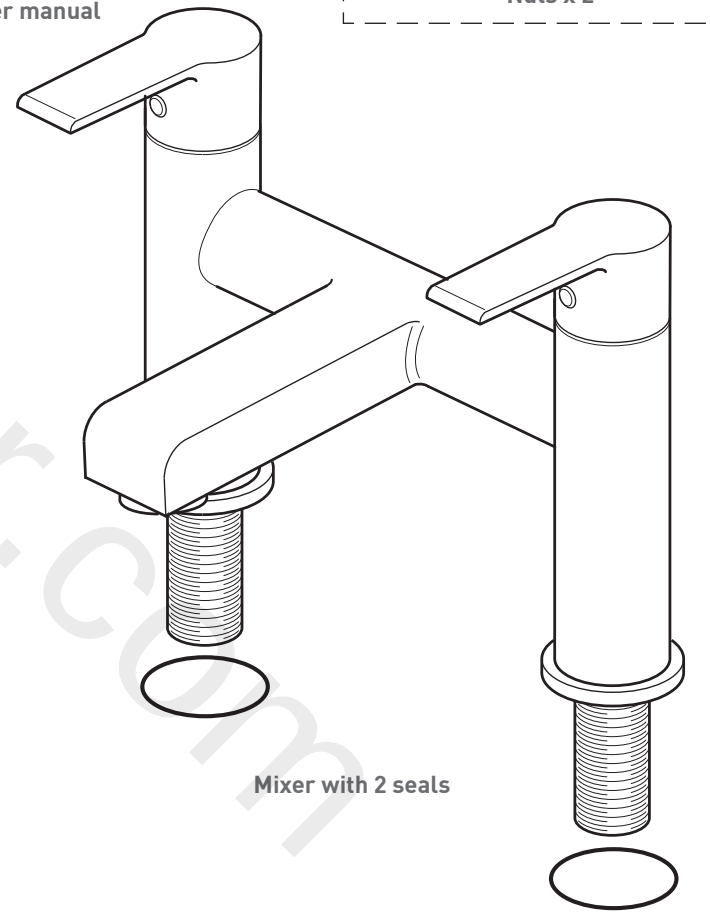

Mixer with 2 seals

www.divapoor.com

Dimensions

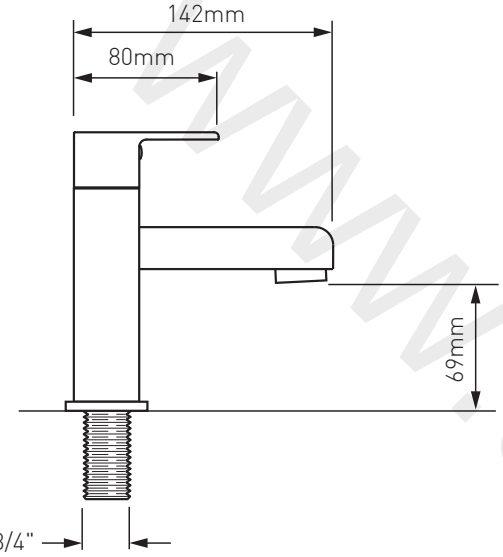

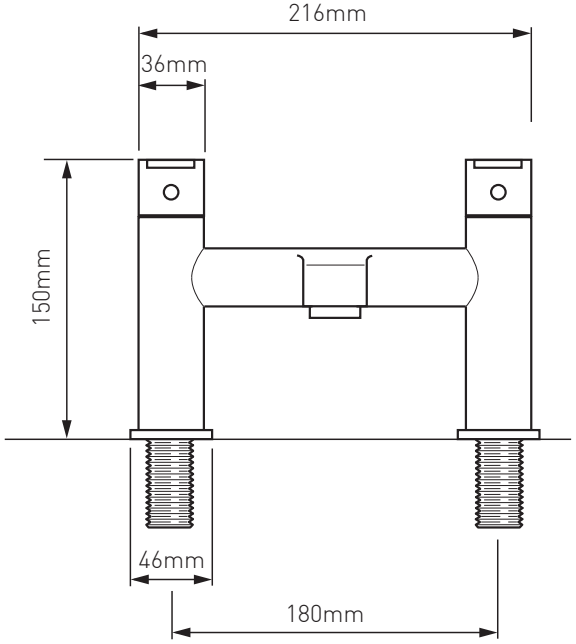

Installation - Quick guide

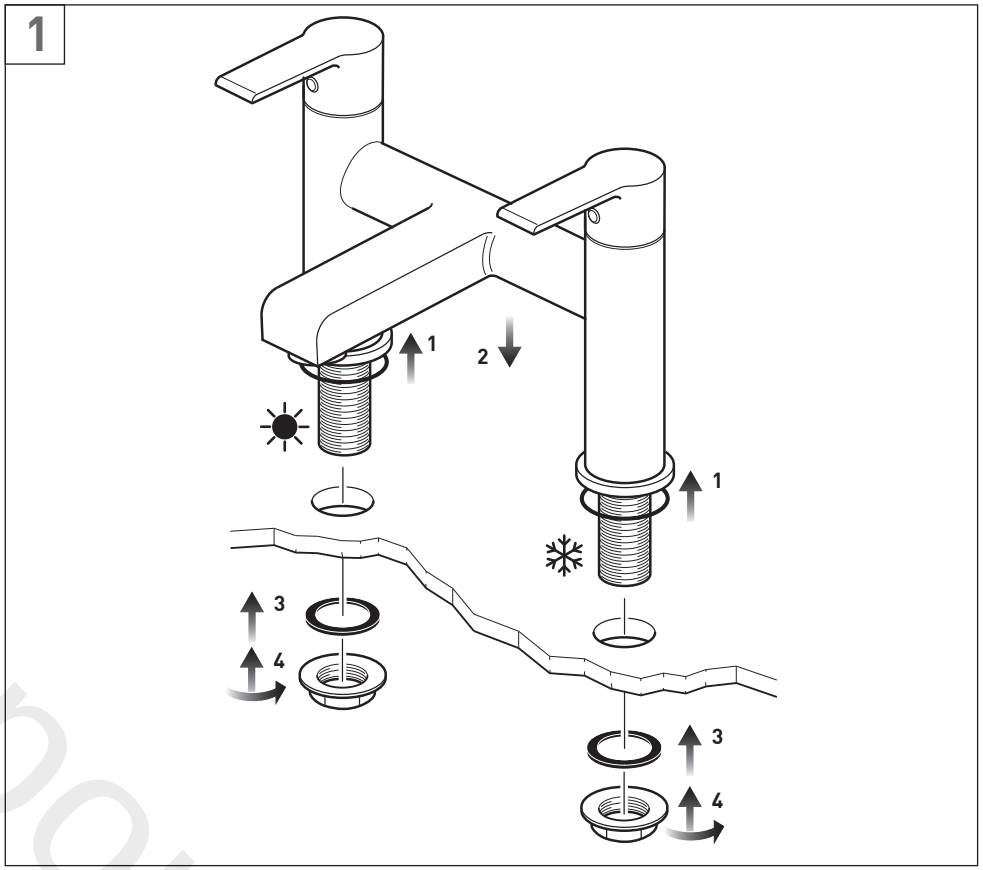

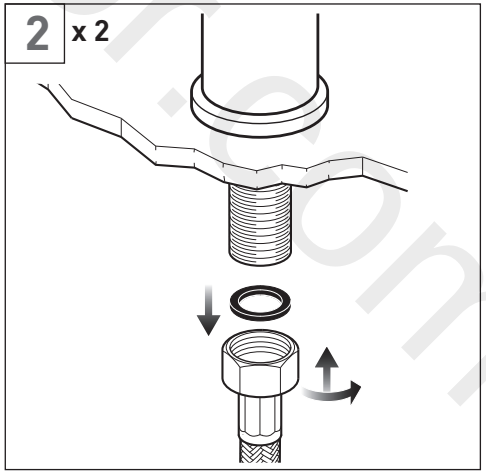

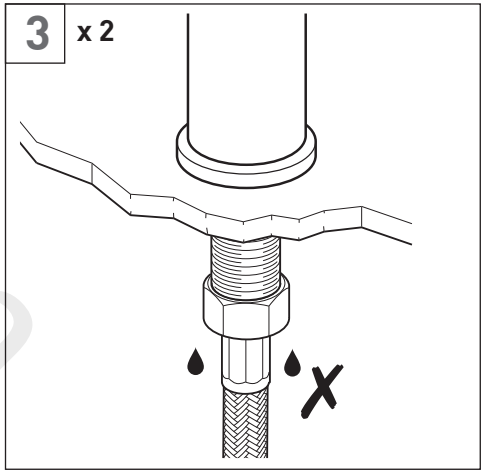

www.divapor.com

Installation

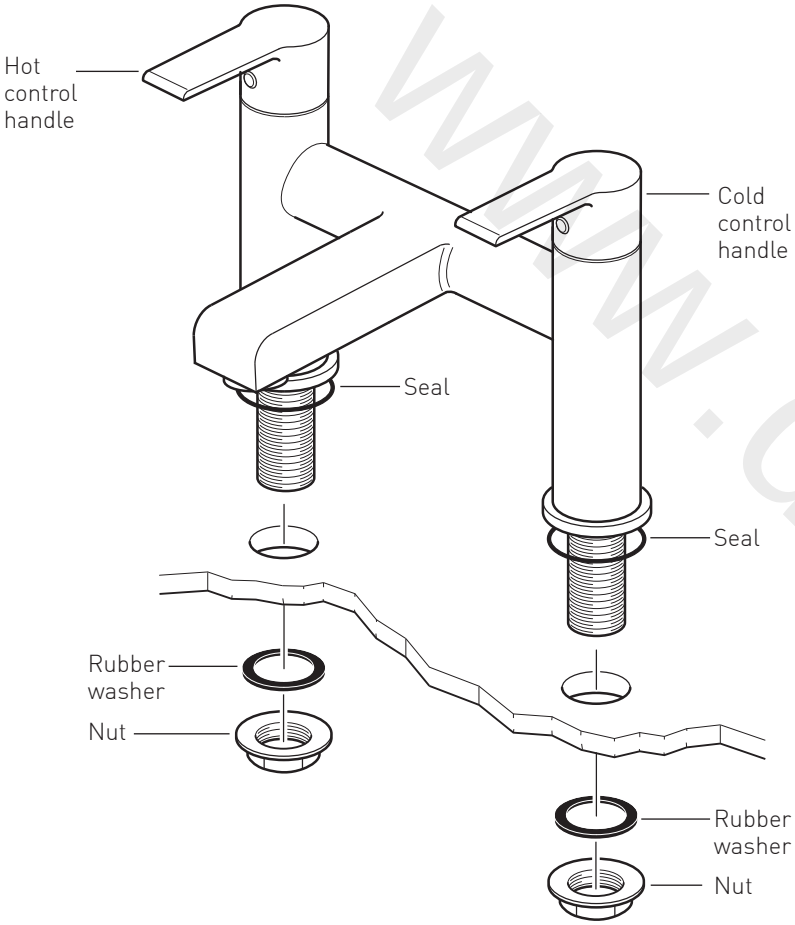

Before installing your new mixer, flush through the pipe work to ensure removal of debris, turn off the water supply.

Make sure that the seals are in position in the bottom of the mixer body.

Position the mixer on the bath. From the underside of the bath fit the rubber washers and nuts. Tighten the nuts to clamp the mixer to the bath.
CAUTION: Do not over tighten the nuts as this may damage the bath.

Connect the water supply to the inlet pipes. The hot water should be connected to the left hand pipe.

Operation

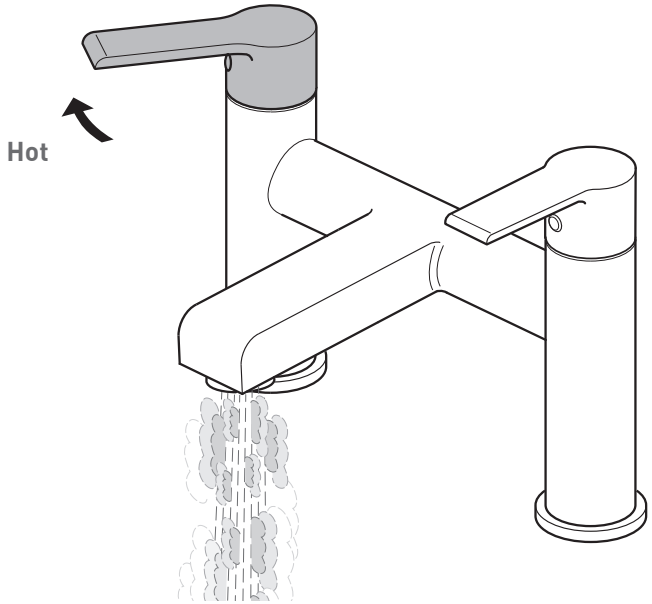

Hot tap - moving the tap lever to the left will increase the flow of water.

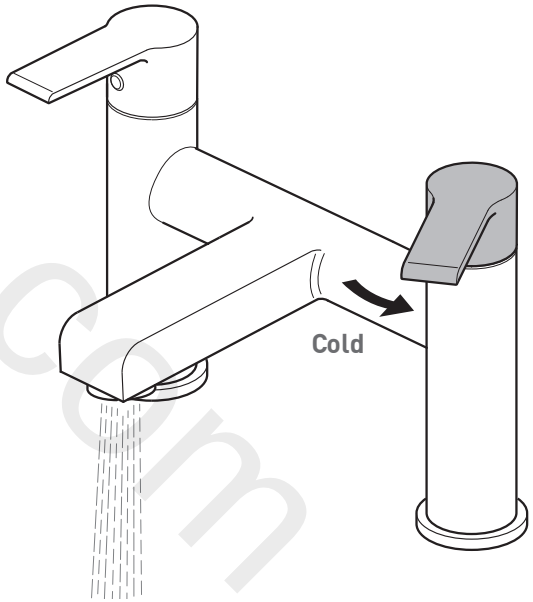

Cold tap - moving the tap lever to the right will increase the flow of water.

www.divapoor.com

Cleaning instructions

The electroplating on this product is finished to the highest standard. Due care needs to be taken to ensure the appearance is retained.
We recommend cleaning all products with a soft damp cloth ONLY and advise strongly against the use of all aggressive/corrosive cleaning products i.e. powders and liquids. If these instructions are not followed, this may invalidate your guarantee in the event of a problem occurring.

Notes

www.divapor.com

Notes

Guarantee

All AXCES by VADO products come with a 2 year guarantee as standard. Within this guarantee period VADO will provide replacement parts and any labour **[SEE NOTE 1, GUARANTEE CONDITIONS]** needed to complete the product repair.

This standard guarantee may be extended by registering your product to give a 10 year guarantee (2 years parts and labour plus 8 years on parts supply only.).

Operational components such as, but not limited to; thermostatic cartridges, diverters, headworks and flow control, waste mechanisms, shower hoses, O-rings and seals are guaranteed for 2 years parts and labour plus 3 years on parts supply only.

Guarantee Conditions

Our products are guaranteed against manufacturing defects from the date of purchase until the expiry of the relevant guarantee period shown above.

The guarantee is only valid if:

•The product has been installed, used and maintained in accordance with VADO's instructions and subjected to normal use only.

•The defect is not due to use of an unsuitable or inadequate water or power supply.

•The defect is not due to accident, misuse, neglect or incorrect/inappropriate repair (other than by VADO or VADO authorised agents) or damage caused by foreign objects or substances.

•The extended guarantee is only available if you have completed the Guarantee Registration Process. This can be done via the VADO website or via phone to our aftersales team. Registration must be completed within 6 months from date of purchase.

Under the extended guarantee period VADO will, at its option, offer to supply any replacement product (or component part) assessed to be defective **[SEE NOTE 2]**.

The guarantee (whether standard or extended) is non-transferable to any subsequent owner.

All claims under the guarantee should be notified in the first instance to our Aftersales department, contact details below, this must be done no later than the last day of the relevant guarantee period. All claims must be accompanied by proof of purchase (sales receipt or delivery note) from an official AXCES by VADO dealer.

The guarantee does not extend to any consequential loss or damage.

After repair or replacement, the relevant guarantee period will be calculated from the original date of purchase.

VADO operates a policy of continuous product development and therefore reserves the right to change the product, packaging and documentation specifications without notice.

NOTES:

[1] Labour via our engineer network is only available in the UK. Attendance by a VADO engineer or sub-contract engineer will be under our standard terms and conditions.

[2] VADO reserves the right to charge in advance for a product (or replacement part) pending collection and investigation (at VADO expense) to confirm a defect is due to a manufacturing issue. If a defect is found the charge will be refunded or cancelled.

This guarantee is in addition to and does not affect your statutory rights as a consumer.

Tel: 01934 745163

Email: aftersales@vado.com

www.divapart.com