abode

Atlas single lever

Product Finish: Matt Black	Product code: AT2101 EAN13 barcode: 5060344157612

Note: the image shown may not reflect the product finish, chrome finish is typically depicted.

Product features:

- Metal construction throughout
- Single lever control for effortless single handed control
- Leading design performance requiring higher pressures
- Solid and functional European architect design styling
- Antisplash spout supplied as standard

Additional information / Parts included:

2 & 2.5mm a/f Allen key included

Product dimensions:

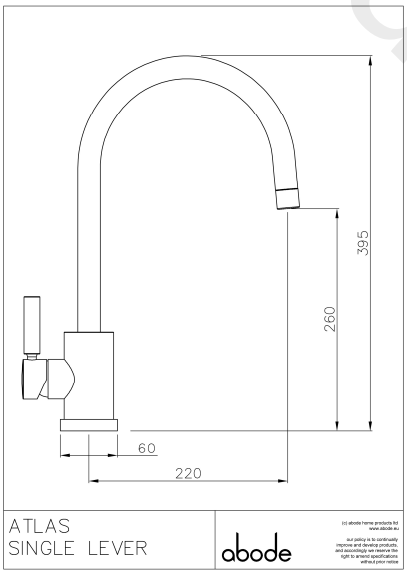

- **Overall Height / projection:** 395 mm
- **Exit reach:** 220 mm
- **Exit height:** 260 mm
- **Centre distance(s):**

- **Base diameter(s):** 60 mm
- **Recommended hole diameter:** Ø 35 mm
- **Max. surface depth:** 40 mm

- **Spout diameter:** 24 mm
- **Spout aerator size:** 22f

Packaged properties:

Box length: 430mm	**Box depth:** 70mm
Box width: 340mm	**Units per outer:** 5
Tap only weight: 1.83kg	**Boxed weight:** 2.45kg

Product flow characteristics:

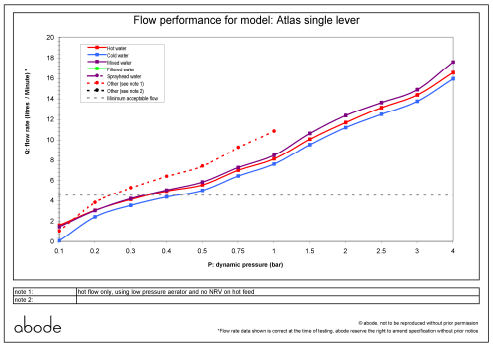

- **Min / Max water pressure:** 0.50 / 5.50 bar
- **Recommended / Max water temperature:** 46°C / 70°C
- **Part G - Mixed flow rate at 3 bar (litres / min):** 14.85

- **Control valve type:** Single lever ceramic cartridge
- **Product flow characteristics:** Single flow
- **Non return valve(s):** 1 x NRV supplied

- **Aerator type:** Plastic mesh diffuser
- **Accepts revolve / spray areator:** Yes
- **Spout connection method:** Grub screw

- **Tail pipe inlet / outlet size:** M12 / 15mm Ø
- **Inlet pipe type / length:** copper rigid tube / 245 mm

Care instructions summary:

- Clean the mixers and showers regularly as required, using soap, do not use any other cleaners.
- Regular cleaning will prevent the build-up of lime scale and dirt
- After cleaning rinse thoroughly with clean water to remove any cleaner residue
- Residues of sink & worktop cleaners can also cause damage, so rinse with clean water after using, avoid contact with any abrasives

Warranty Summary (Full details available on request):

- Materials and workmanship defects warranted for 5 years
- Valves and working parts warranted for 5 years
- Surface warranty defects warranted for 1 year
- O-rings, hoses & gaskets warranted for 1 year

www.divabar.com