This installation guide covers model:

ARR-100/CC-CP
ARR-100/SB-CP

WHERE
INSPIRATION
FLOWS

15 year guarantee

VADO
Wedmore Road Cheddar Somerset England BS27 3EB
tel 01934 744466
fax 01934 744345
www.vado.com
sales@vado.com

Version 1, 1-4-22

ARRONDI™

Mono basin mixer with and without universal waste

Installation Guide

ARR-100/CC-CP
ARR-100/SB-CP

15 year guarantee

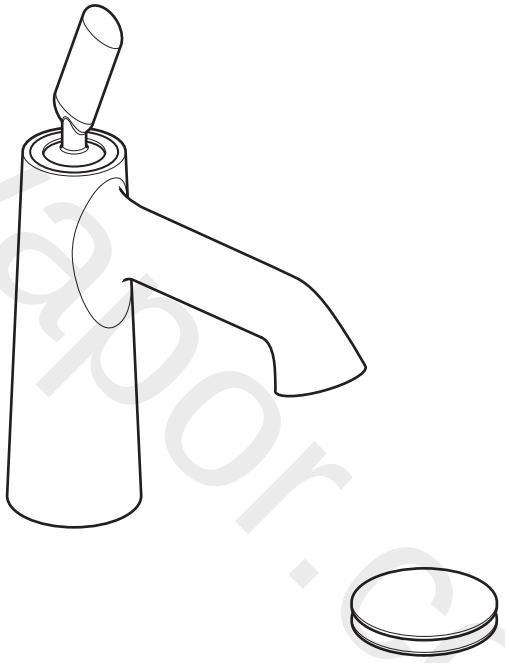

CONRAN AND PARTNERS

VADO

www.divapor.com

Important - Please Read

Please read these instructions carefully before starting installation and keep for future reference.

Remove all packaging and check the product for missing parts or damage before starting installation.

Any alterations made to this product and fittings may infringe water regulations and will invalidate the guarantee.

The installation must comply with all Local/National Water Supply Authority Regulations/Byelaws and Building and Plumbing Regulations.
To be installed in accordance with BS EN806.

We strongly recommend that you use a qualified and registered plumber.

General Installation

This fitting is a mixing device and therefore water supplies should be reasonably balanced.

When installed, the fitting must comply with the requirements of the Water Supply (Water Fittings) Regulations 1999 and Scottish Byelaws 2004.
For further information, contact the Water Regulations department of your local water supplier (see the WRAS website www.wras.co.uk for details) or the Water Regulations Advisory Scheme by email (info@wras.co.uk) or telephone: 01495848454.

Before making any inlet pipe connections, all supply pipes MUST be thoroughly flushed to remove debris. Failure to do so could result in damage or low flow from the mixer unit. Water Supply (Water Fittings) Regulations 1999 Schedule 2 Section 13.

The fitting of isolating valves to the inlet feeds is advised for ease of maintenance.

Please take great care when installing this mixer not to damage its surface.

Please note if installing in an enclosed environment, access should be left for servicing and maintenance. No costs relating to inadequate access can be accepted.

Operating Specifications

Operating Pressure

Minimum operating pressure **1 bar**
Maximum operating pressure **5 bar**

Contents of Packaging

Installation guide & User manual

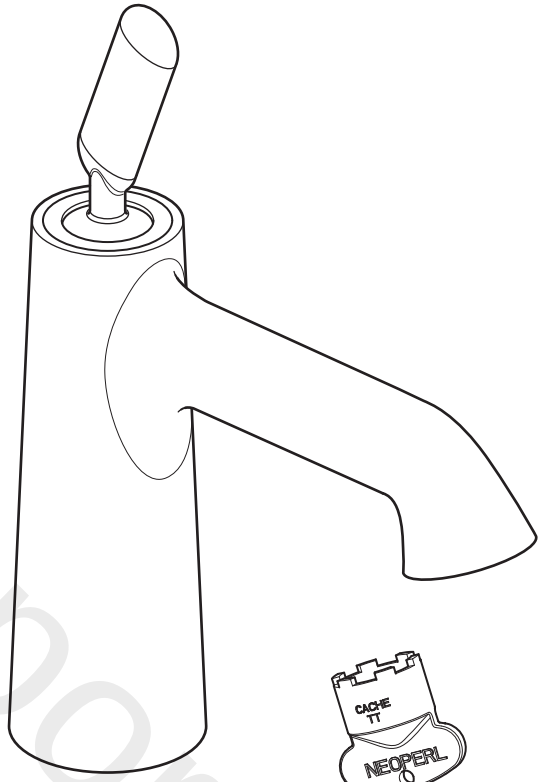

Tap body

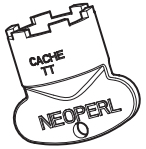

Aerator Key

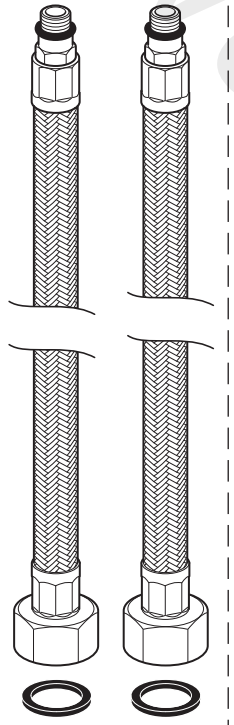

Flexible hoses
with washers

FIXING KIT BOX

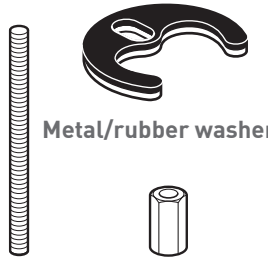

Metal/rubber washer

Threaded rod

Nut

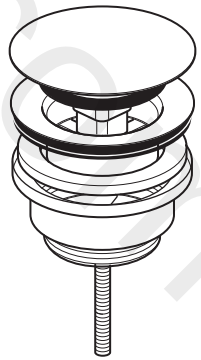

Universal Basin Waste assembly ARR-100/CC-CP only

www.diyvapor.com

Dimensions

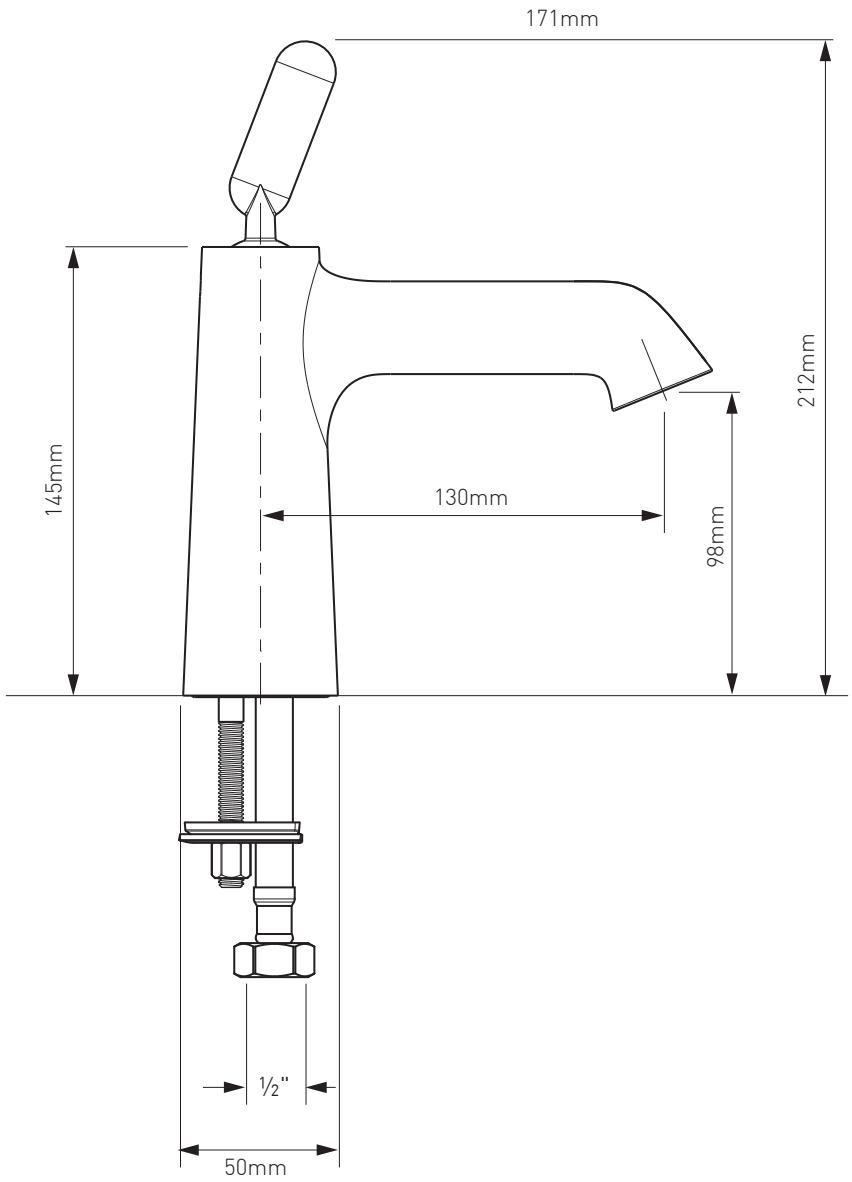

Installation - Quick Guide

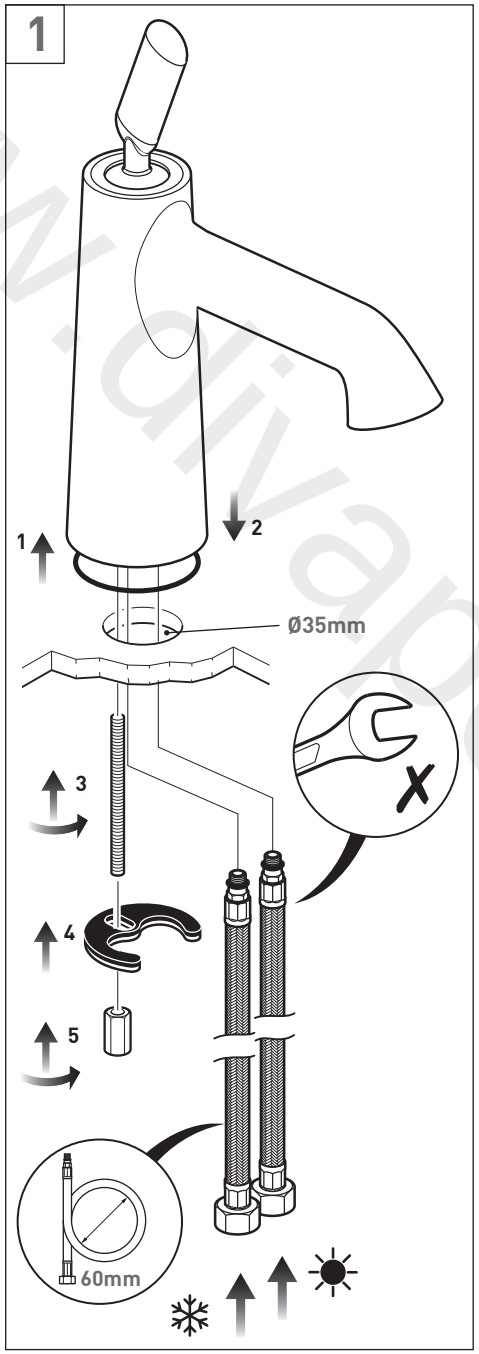

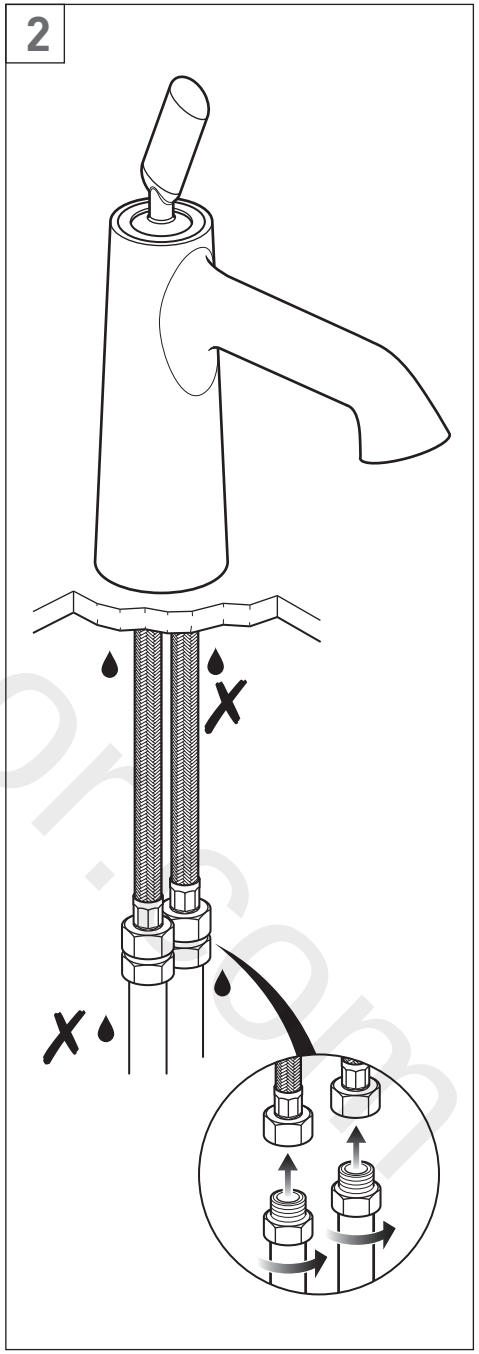

www.divapoint.com

Installation - Quick guide

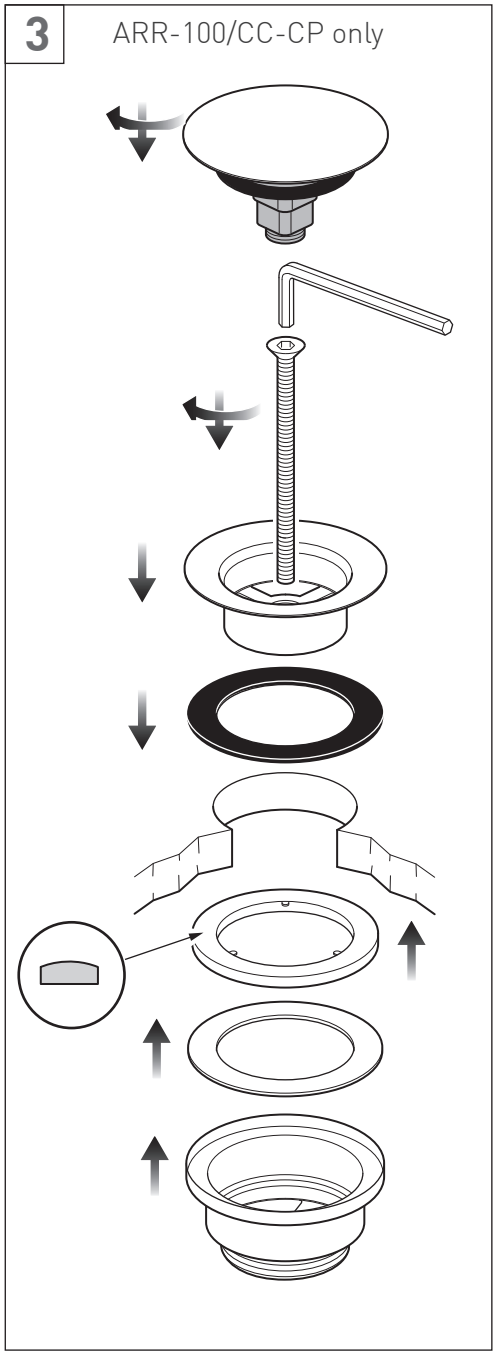

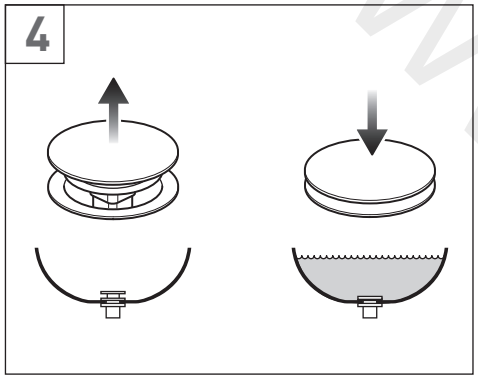

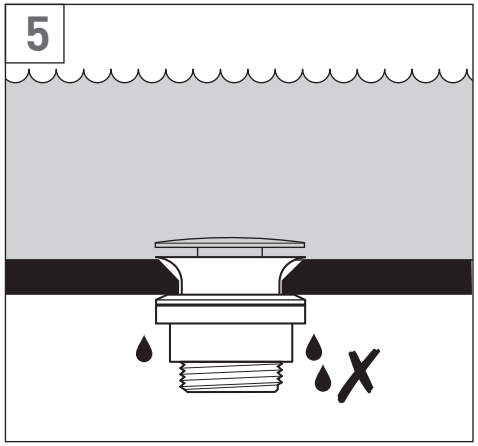

Installation

Before installing your new mixer, flush through the pipe work to ensure removal of debris, turn off the water supply.

Make sure the O-ring is in place on the underside of the body.

Position the mixer on the basin. From the underside of the basin screw the two flexible pipes to the hot and cold connections in the mixer body, the **cold** should be to the **left** and the **hot** to the **right**, **hand tighten only**.

Screw the threaded rod into the back hole in the base of the mixer body and suitably tighten.

Slide the washers onto the threaded rod, the rubber washer should be on top. Tighten the nut to clamp the mixer to the basin.

CAUTION: Do not over tighten the nut as this may damage the basin.

Connect the water supply to the inlet pipes. The **cold** water should be connected to the **left** pipe and **hot** to the **right**.

CAUTION: When installing the flexible hoses **do not** kink, or bend them more than the 60mm diameter as shown right.

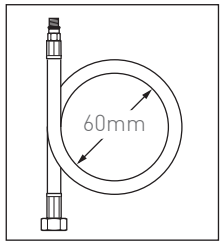

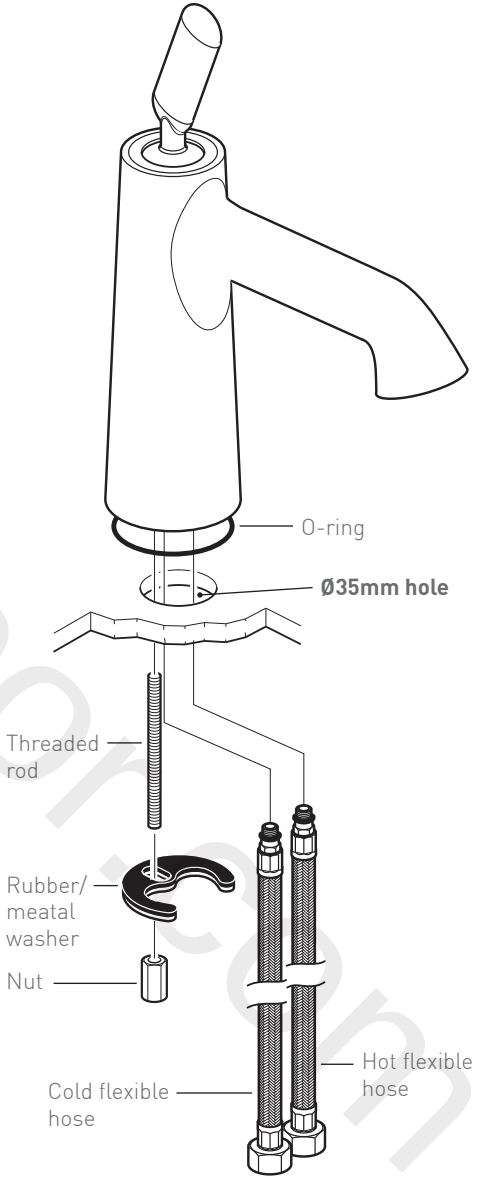

www.mywapon.com

Installation

Only applies to the ARR-100/CC-CP.

Disassemble the push waste.

Unscrew the plug from the waste flange. Remove the bolt from the waste flange and body.

Slide the flange seal over the waste flange, and push the bolt down through the waste flange.

Place the waste flange with seal through the hole in the basin and position.

From beneath place the washer then the base ring into the waste body (note the curved surface of the base ring should be to the top).
Position the waste body and bolt the flange into the waste body until tight using the hex key.

CAUTION: Do not over tighten as this may damage the parts and/or the basin.

Screw in the plug into the flange.

Check for leaks.

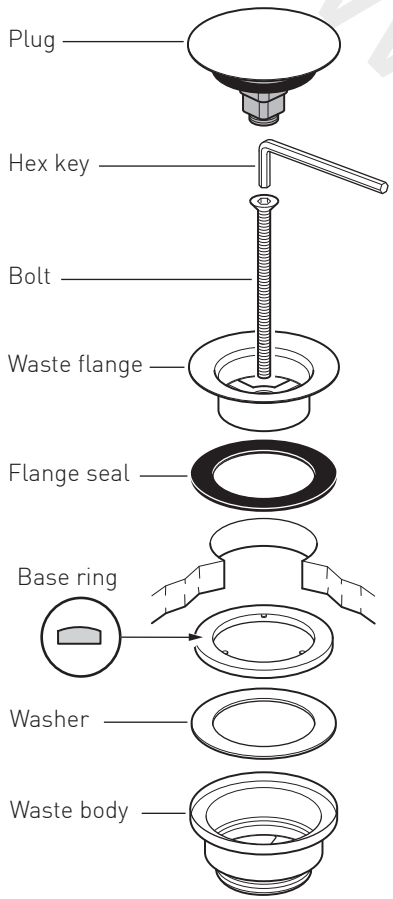

Notes:

www.divapor.com

Notes:

Notes:

www.divapor.com