Beautifully Traditional

ARCADE™

TECHNICAL DETAILS

For full technical details on all our products,
please visit our website www.burlingtonbathrooms.com

Arcade bath shower mixer
- deck mounted with brass handle handset — ARC 2018 NKL, ARC 2018 CHR

Arcade bath shower mixer
- wall mounted with brass handle handset — ARC 2019 NKL, ARC 2019 CHR

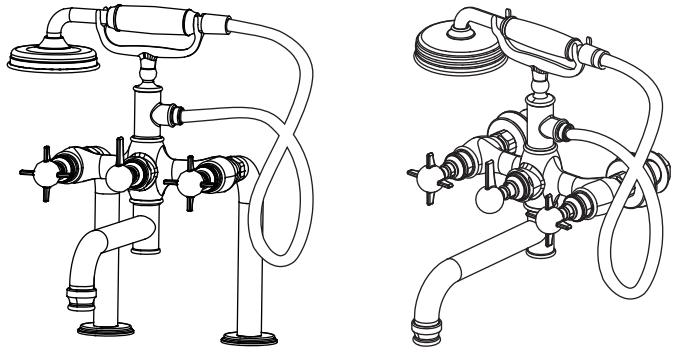

* The product in this package has no handles supplied.
The handles shown in the diagram are for reference only.

Arcade has 4 different style handle for your selection.

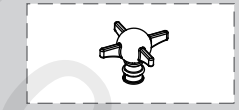

Crosshead handle

White ceramic lever
Black ceramic lever
Brass lever

NOT INCLUDED IN THE TAP BOX

INSTALLATION INSTRUCTIONS

www.divapoor.com

Arcade bath shower mixer
- deck mounted with brass handle handset — ARC 2018 NKL, ARC 2018 CHR

Arcade bath shower mixer
- wall mounted with brass handle handset — ARC 2019 NKL, ARC 2019 CHR

INSTALLATION INSTRUCTIONS

Please read these instructions carefully and keep in a safe place for further reference.

General Installation Requirement
The installation must comply with regulations of the Local Water Authority as contained in their bylaws. It will be necessary to fit non-return valves on both the hot and cold feeds. It is very important that all pipework is flushed thoroughly after installation to avoid impurities damaging the ceramic discs.

Minimum/Maximum working pressure
These taps are suitable for high and low pressure installations. They are fitted with quarter turn ceramic disc headwork which provides a smooth movement. The minimum work pressure is 0.2 bar. The maximum work pressure is 5 bar. RECOMMENDED PRESSURE 1 BAR MINIMUM. If the mains pressure is over 5 bar, a pressure reducing valve should be fitted.

Approvals
All taps are manufactured using materials tested and approved under the Water Bylaws Scheme and comply with requirements of European standard EN200 where applicable.

Preparations and bylaw requirements
Water Bylaws require that where hot water is supplied from tank and cold from mains, non return valves are fitted on both hot and cold pipes as close as possible to the tap. These are not supplied. Where combination boilers are fitted, it is only necessary to shut off the incoming mains and turn the boiler off. Non return valves are not required.

Warning
Before installing the new taps, it is essential that you thoroughly flush through the supply pipes in order to remove any remaining swarf, solder or other impurities. Failure to carry out this simple procedure could cause problems or damage to the working of the taps.

These hints are prepared for your guidance; you must exercise due care at all times. We do not accept responsibility for any problems that may occur through incorrect installation.

DIMENSIONS

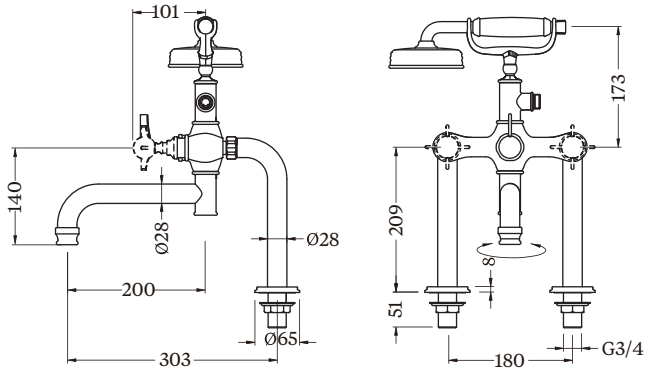

Bath Shower Mixer - Deck Mounted

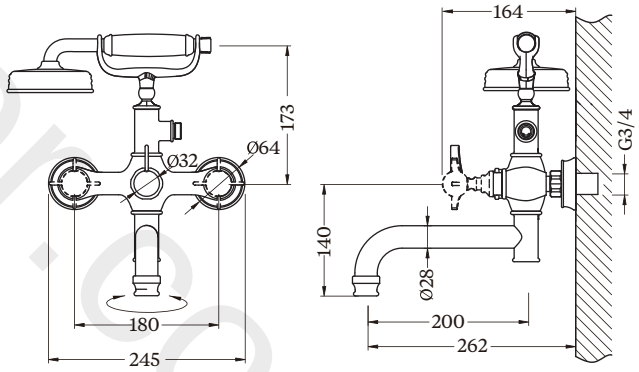

Bath Shower Mixer - Wall Mounted

NOTE: ALL DIMENSIONS IN MILLIMETRES

www.divapoor.com

Arcade bath shower mixer
- deck mounted with brass handle handset — ARC 2018 NKL, ARC 2018 CHR

Arcade bath shower mixer
- wall mounted with brass handle handset — ARC 2019 NKL, ARC 2019 CHR

INSTALLATION INSTRUCTIONS

ARC 2018 NKL, ARC 2018 CHR — Arcade bath shower mixer
- deck mounted with brass handle handset

SHOWER MIXER & UNIONS

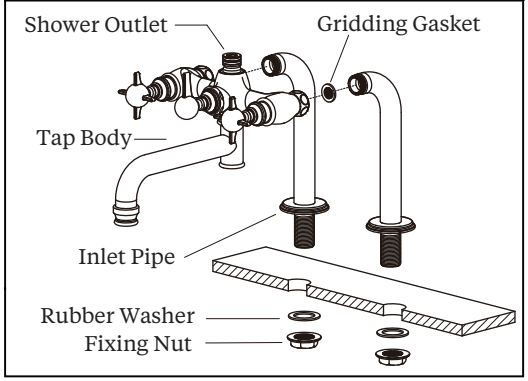

1: Remove the washers and fixing nuts from the tails of Deck mounting unions.
2: Insert the tails in the tap holes on bath.
3: Tighten the rubber washers & the fixing nuts from the underside of the bath, and make sure the two unions are at 180mm centers.
4: Tighten the Bath Shower Mixer on joint nuts and connect with the Deck mounting unions.

SHOWER HANDSET CONNECTIONS

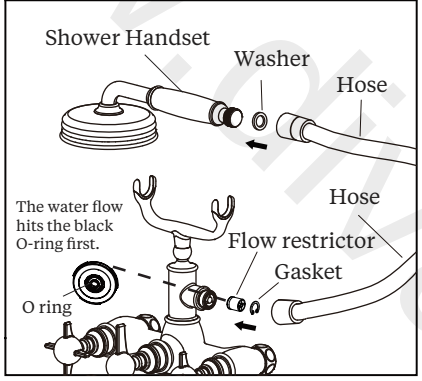

1: Insert the Washer into the cone-shaped end of the hose, and then connect it with Handset.
2: Insert the Flow restrictor into the other end of the hose, and then connect it with the mixer outlet.

INSTALLATION INSTRUCTIONS

ARC 2019 NKL, ARC 2019 CHR — Arcade bath shower mixer
- wall mounted with brass handle handset

SHOWER MIXER & UNIONS

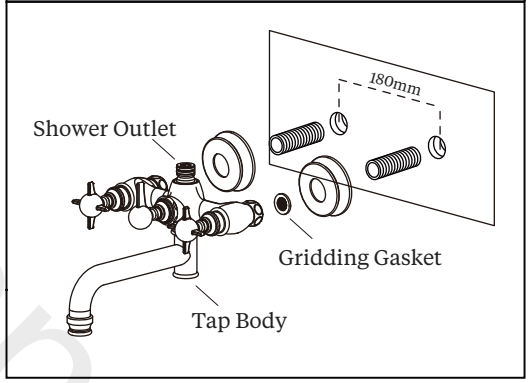

1: Ensure that the supply pipes are at 180mm center distance.
2: Enlace the connectors with PTFE tapes. Then connect them with the supply pipes in the wall.
3: Slide the decorative covers onto the connectors, then connect the mixer body with the connectors.
4: Adjust the decorative covers slightly if needed.

SHOWER HANDSET CONNECTIONS

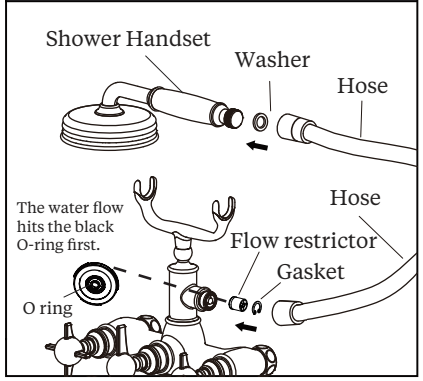

1: Insert the washer into the cone-shaped end of the hose, and then connect it with Handset.
2: Insert the Flow restrictor into the other end of the hose, and then connect it with the mixer outlet.

www.diyapron.com

MAINTENANCE

Note : Remember to turn off the water supply before commencing any maintenance.

Cleaning the cartridge
The concealed cartridge should give trouble free service, but in the event of any problem, service is straight forward.

To remove the cartridge
Unscrew the top of the tap and then use a suitable adjustable spanner (not supplied) to loosen the nut. Take the cartridge out and wash it with clean running water. Make sure any trapped debris has been removed. Dry and lightly grease the seal (only use silicone grease). Refit the cartridge followed by the handle body and lever.

CLEANING
The nickel/chrome plate we use on our taps is very durable, nevertheless care should be taken when cleaning. It should be cleaned only with warm soapy water followed by rinsing with clean water and drying with a soft cloth. All finishes are vulnerable to acid attack and some strong substances such as household cleaners, disinfectants, denture cleaners, hair dyes, wine making and photographic chemicals can cause the surface to go black or peel.

FILTER CLEANING

Taps are supplied with two different filters : low pressure Flow Straigteners (factory fitted) and high pressure Neoperl Aerators (in the box). These fit into the front of the tap nozzle.

Before use : unscrew the filter and allow the water to run freely for 5 minutes. Screw the filter back into the nozzle once all impurities have been flushed from the water supply.

Periodically : Using the key provided in the box unscrew the filter from the nozzle and rinse with clean running water. Once all loose debris and dirt has been cleared replace the filter into the nozzle and tighten with the key provided.

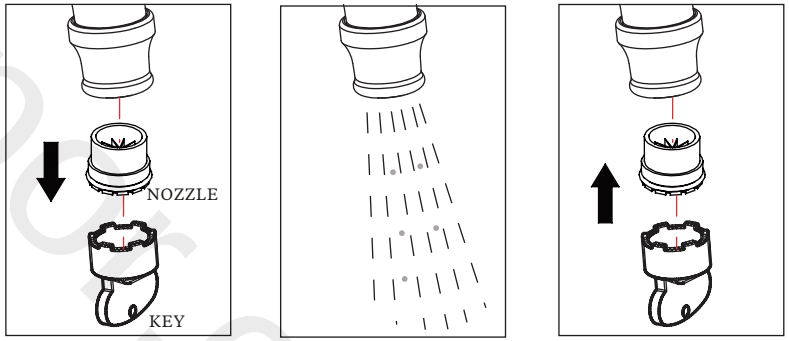

www.divapp.com

FILTER NOZZLES

Flow Straightener Filter and Neoperl Aerator Filter

The taps are supplied with factory fitted Flow Straightener filters for low pressure water systems. If the water pressure is high (above 1 bar), replace the flow straightener filter with the high pressure Neoperl aerator filter.

Use the Neoperl key supplied in the box to unscrew the Flow Straightener from the nozzle. Replace with the Aerator filter. If you misplace the supplied Neoperl key, use the top of the spare filter to unscrew the filter from the nozzle.

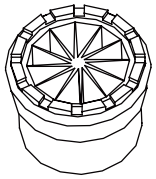

FLOW STRAIGHTENER

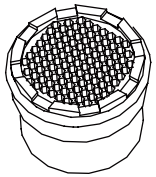

AERATOR

THE QUALIFICATIONS
This product should only be fitted by a qualified plumber to the equivalent of UK NVQ (National Vocational Qualification) or SNVQ (Scottish National Vocational Qualification) Level 3. Should the installation be completed by a non-qualified person then the guarantee may be considered invalid.

www.divapoor.com

www.divapor.com