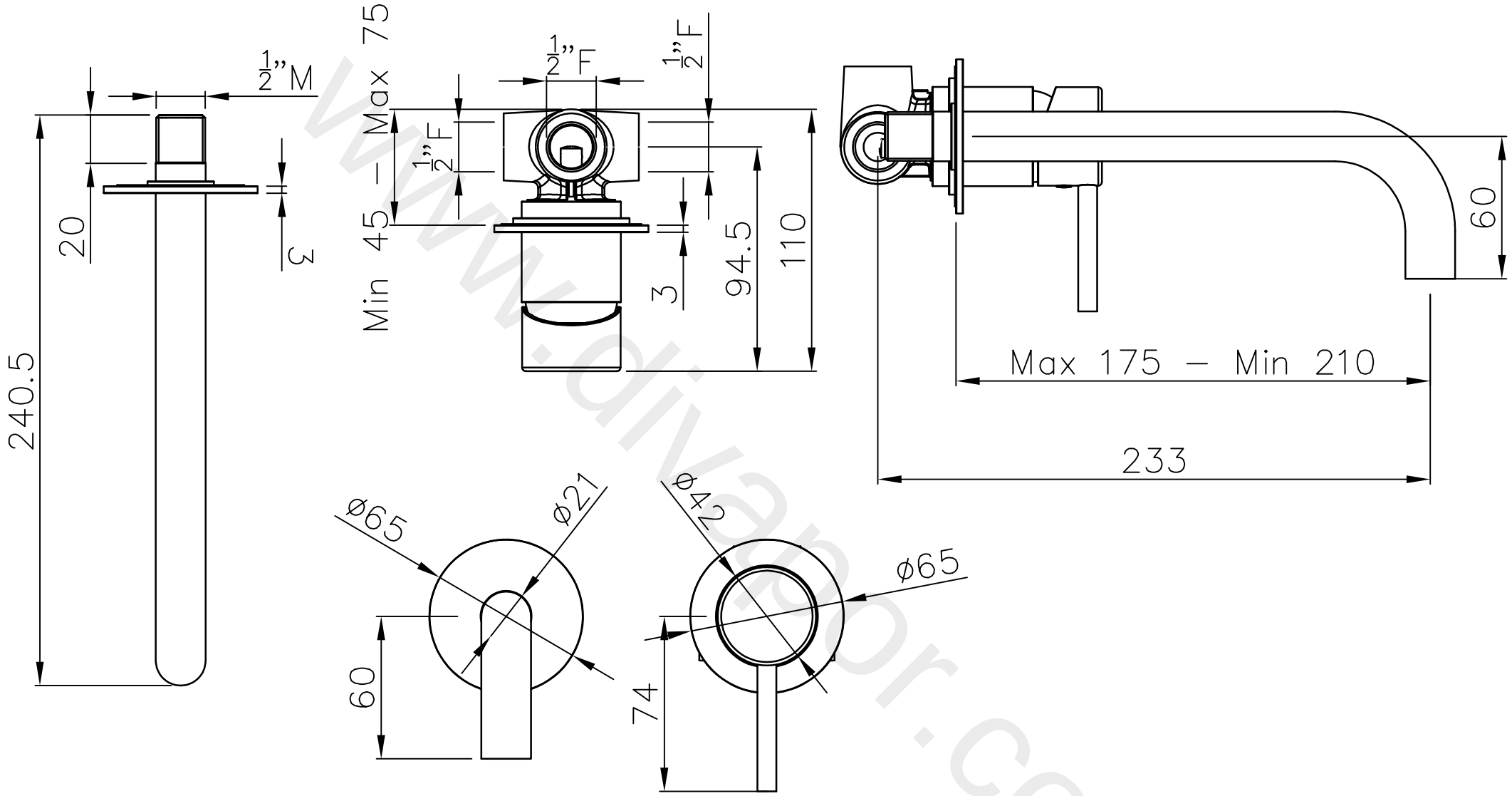

Harmonie
Wall Mounted 2 Part
Basin & Bath Mixer

abode

(c) abode home products ltd
www.abode.eu

our policy is to continually improve and develop products, and accordingly we reserve the right to amend specifications without prior notice

www.divapoor.com