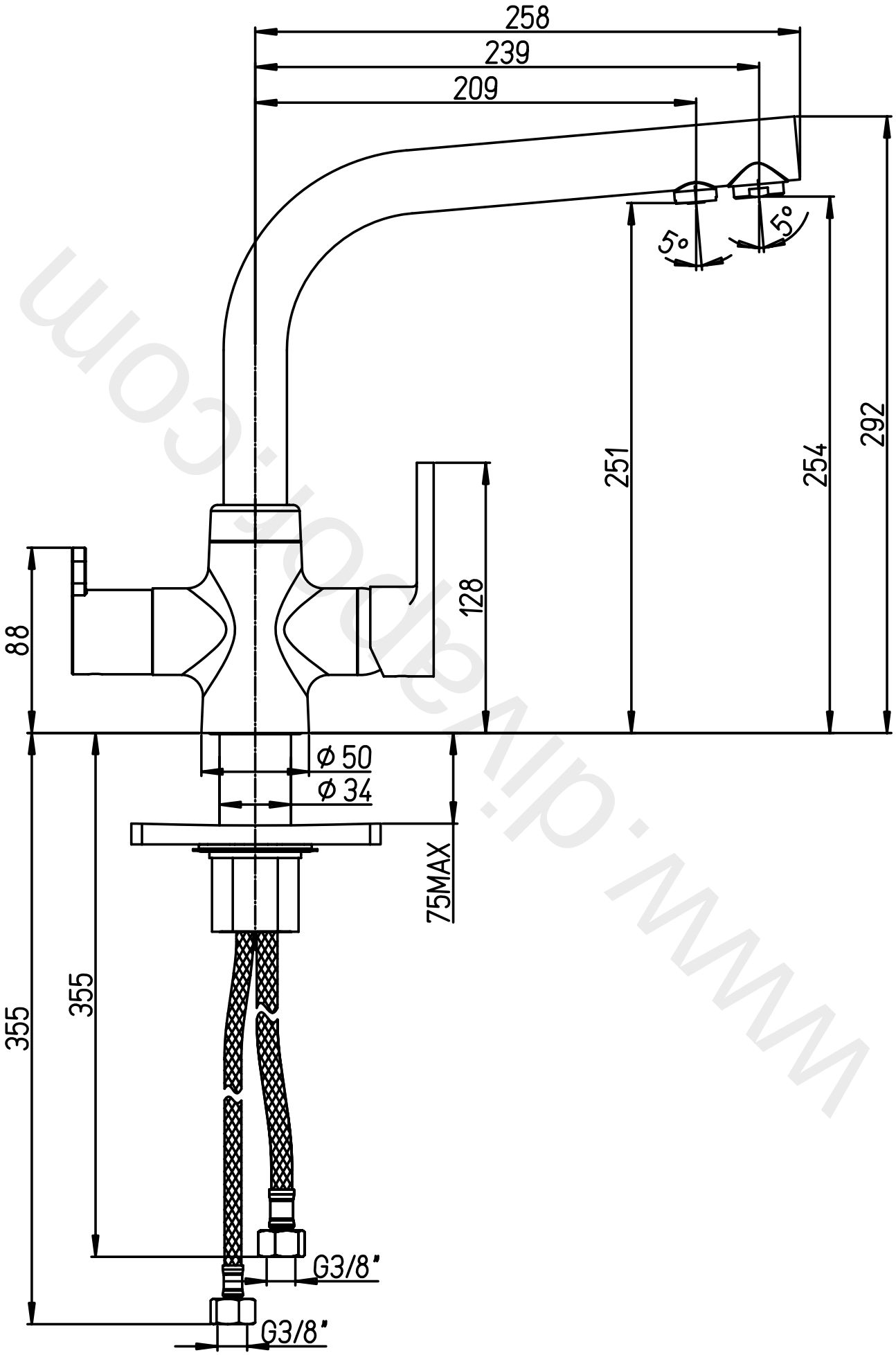

www.diwapoint.com