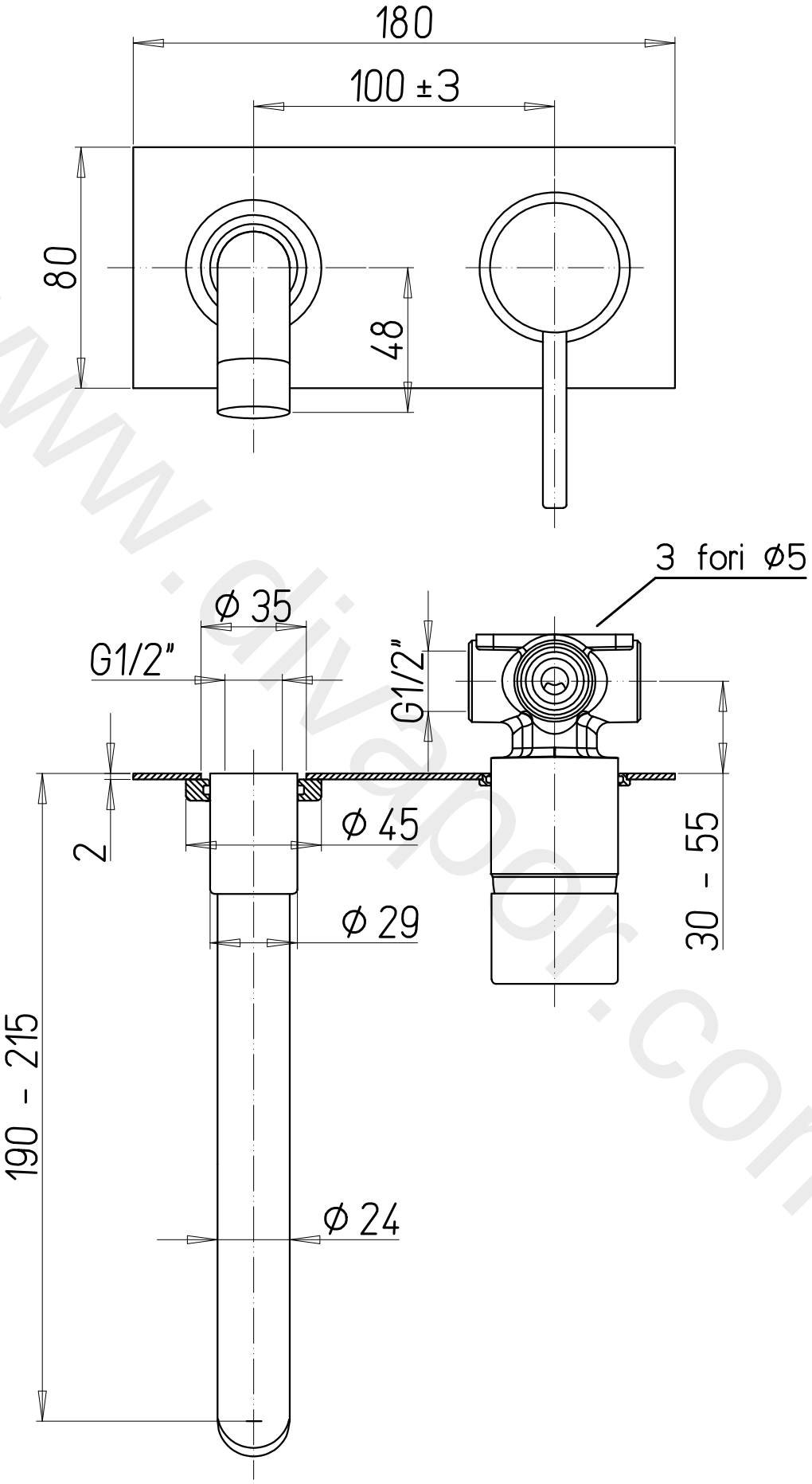

www.divapoor.com