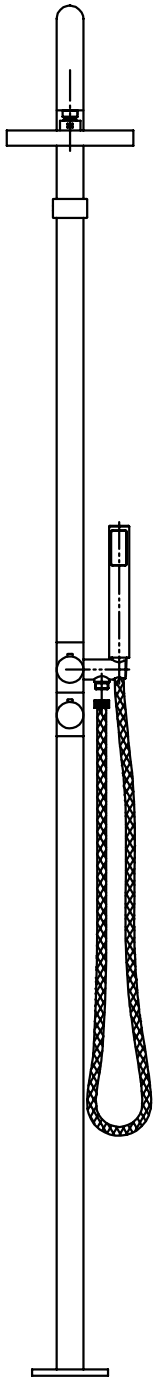

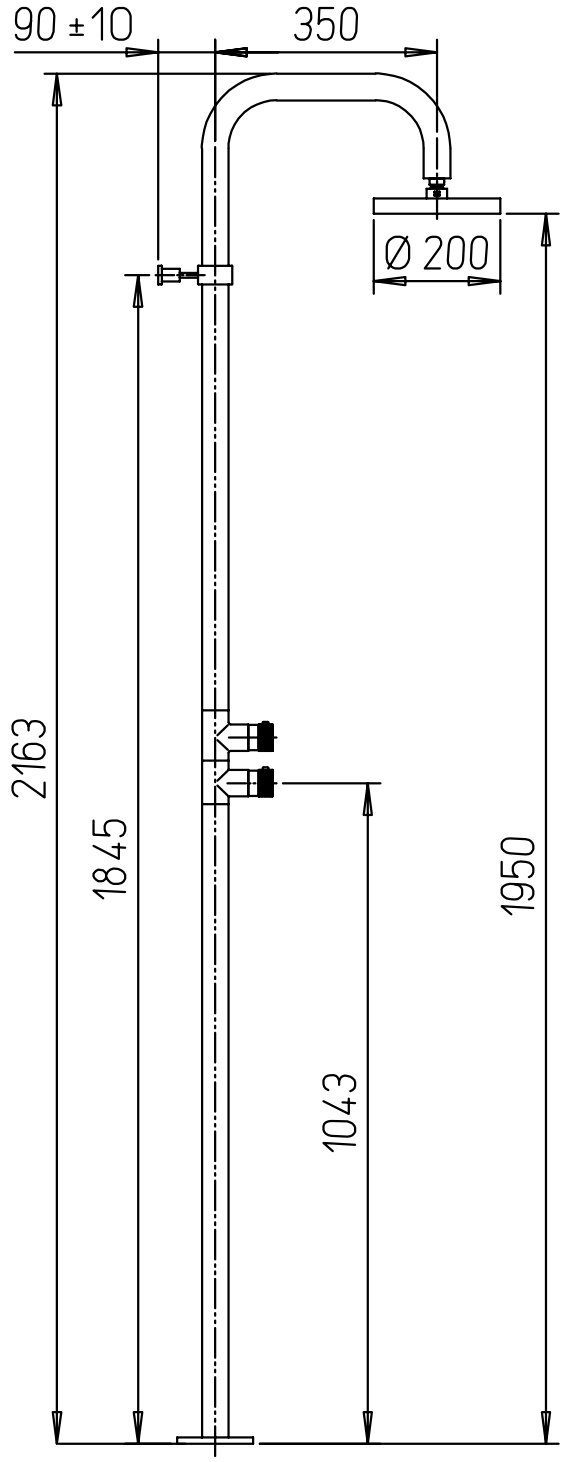
90 ±10
350
Ø 200
2163
1845
1043
1950

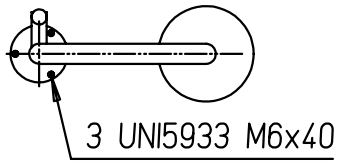
3 UNI5933 M6x40

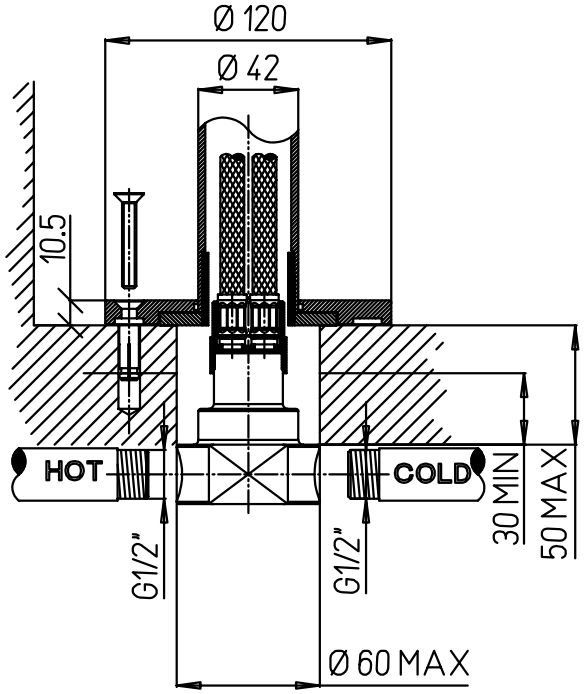
Ø 120
Ø 42
10.5
HOT
COLD
G1/2"
G1/2"
30 MIN
50 MAX
Ø 60 MAX