Finoris
Single lever basin mixer 230 with pull-out spray, 2jet and push-open waste set
Finish: **Chrome** Article Number: **76063007**

Description

product features

- consists of: single lever basin mixer, waste set
- ComfortZone 230
- projection: 191 mm
- spout height: 229 mm
- handle variant: lever handle
- spray type: laminar spray, PowderRain
- spray returns through pressing spray diverter and spray returns automatically through handle closing
- extension length: 50 cm
- spray disc surface: graphite
- ceramic cartridge
- temperature limitation adjustable
- push-open waste set G 1¼
- material waste set: metal
- connection type: G ½ connections
- connection dimension: DN15
- non-return valve

Technology

EcoSmart | Comfort Zone | Quick Clean | Pull-out Faucet

Design awards

iF DESIGN AWARD 2021

reddot winner 2021

GERMAN DESIGN AWARD GOLD 2022

Product image

Scale drawing

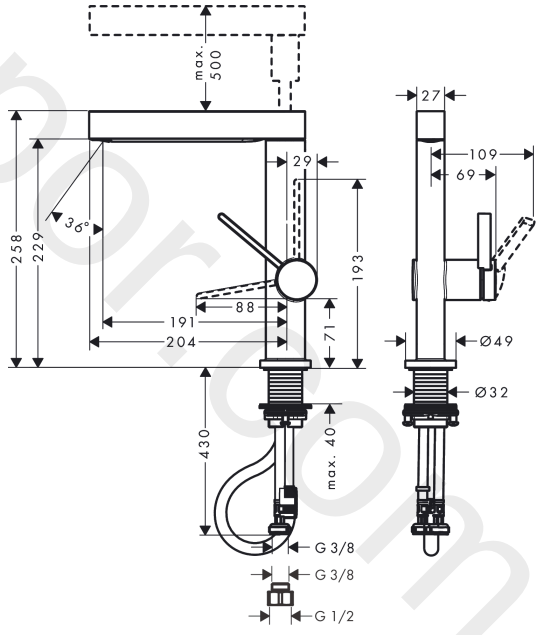

www.diwapor.com

Finoris
Single lever basin mixer 230 with pull-out spray, 2jet and push-open waste set
Finish: **Chrome** Article Number: **76063007**

Flowchart

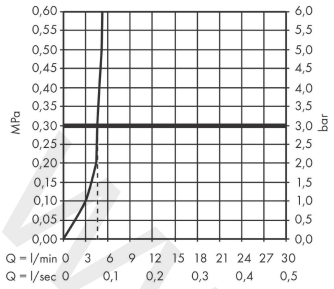

www.divapor.com

Finoris
Single lever basin mixer 230 with pull-out spray, 2jet and push-open waste set
Finish: **Chrome** Article Number: **76063007**

Exploded Drawing

Year of production: **>07/21**

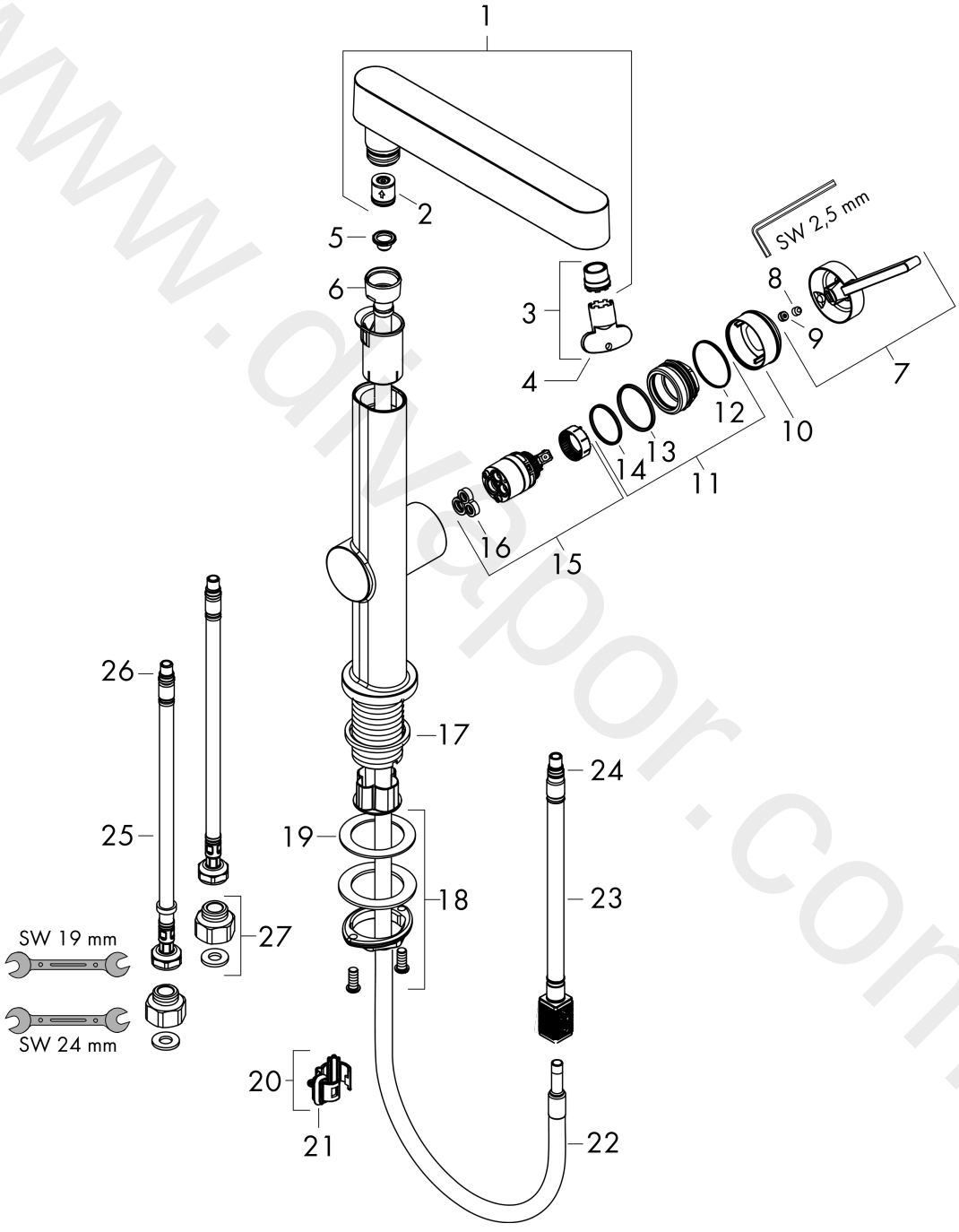

www.drivapor.com

Finoris
Single lever basin mixer 230 with pull-out spray, 2jet and push-open waste set
Finish: **Chrome** Article Number: **76063007**

Spare part list

Year of production: **>07/21**

Pos.	Description	Article Number	Price	PU
1	handspray	94294000	£ 224,00	1
2	flow limiter / non return valve	95376000	£ 25,00	1
3	aerator laminar	94295000	£ 20,50	1
4	special tool	98987000	£ 9,00	1
5	filter	92672000	£ 6,10	1
6	nut	92755000	£ 20,50	1
7	handle	94292000	£ 51,00	1
8	hollow set screw M5x5	98446000	£ 3,30	1
9	screw cover	93735460	£ 9,00	1
10	flange	93737000	£ 43,00	1
11	nut	92926000	£ 16,10	1
12	O-ring 30x1,5	98433000	£ 3,30	1
13	O-ring 29x2	98391000	£ 3,30	1
14	O-ring 25x1,5	98146000	£ 3,30	1
15	cartridge, assy	93760000	£ 96,00	1
16	seal	93383000	£ 13,30	1
17	flat seal	98749000	£ 6,10	1
18	fixing set (Ø 32)	13961000	£ 25,00	1
19	lever collar	97548000	£ 3,30	1
20	cramp	94296000	£ 20,50	1
21	O-ring	94458000	-	1
22	hose 1,25 m	94293000	£ 79,00	1
23	hose	93744000	£ 51,00	1
24	O-ring 7x1,5	98422000	£ 3,30	1
25	connection hose 450 mm M8x0,75 G3/8	97206000	£ 35,00	1
26	O-ring 6,6x1,6	93019000	£ 3,30	1
27	set of adapters	93395000	£ 25,00	1
a	-	50100007	-	1
b	fixation extension 35 mm	13898000	£ 79,00	1

www.divapp.com