**Vivenis**
**Single lever basin mixer 250 for wash bowls with pop-up waste set**
Finish: **Matt White** Article Number: **75040700**



## Description

**product features**

- consists of: single lever basin mixer, waste set
- ComfortZone 250
- projection: 191 mm
- spout height: 251 mm
- handle variant: lever handle
- spray type: WaterfallStream
- maximum flow rate at 3 bar: 5 l/min
- ceramic cartridge
- temperature limitation adjustable
- suitable for continuous flow water heaters
- pop-up waste set G 1¼
- material waste set: metal
- connection type: G ⅜ connections
- connection dimension: DN15
- EU taxonomy: max. 6 l/min - Substantial Contribution (SC) possible

## Article Details

Price excl. VAT 402,50 £

## Technology

AirPower
EcoSmart
Comfort Zone

## Design awards

DESIGN AWARD 2021
reddot winner 2021
GERMAN DESIGN AWARD WINNER 2022

## Product image

## Scale drawing

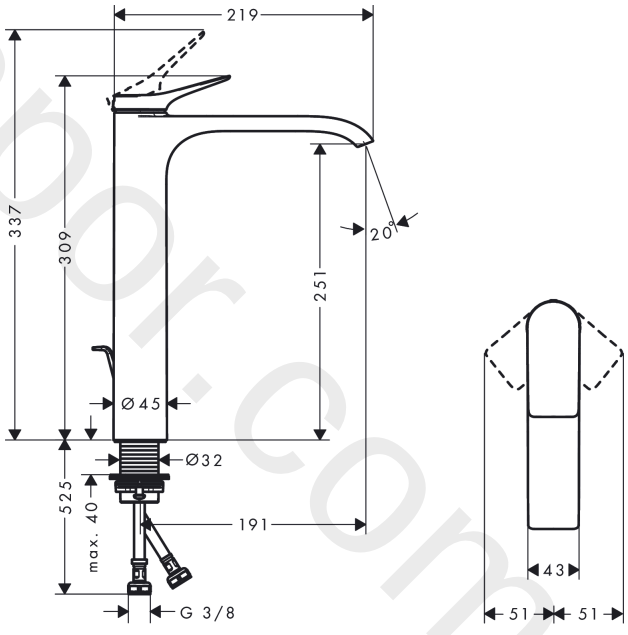


www.diwapor.com

**Vivenis**
**Single lever basin mixer 250 for wash bowls with pop-up waste set**
Finish: **Matt White** Article Number: **75040700**



## Flowchart

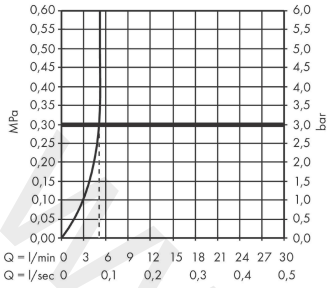


www.divapor.com

**Vivenis**
**Single lever basin mixer 250 for wash bowls with pop-up waste set**
Finish: **Matt White** Article Number: **75040700**



## Exploded Drawing

Year of production: **>06/21**

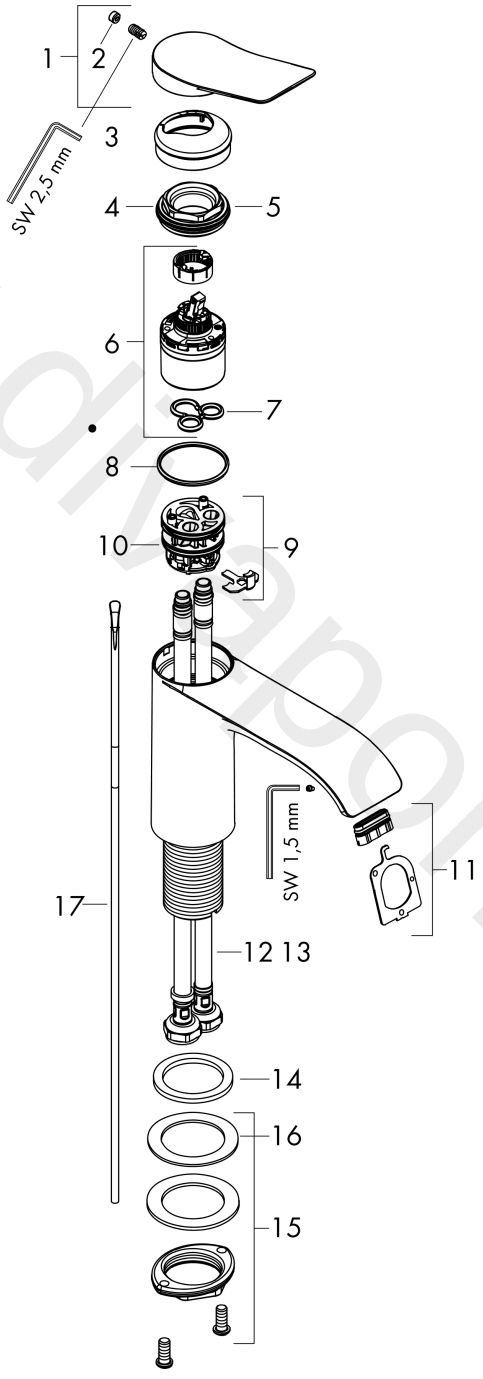


www.dlvapar.com

**Vivenis**
**Single lever basin mixer 250 for wash bowls with pop-up waste set**
Finish: **Matt White** Article Number: **75040700**



## Spare part list

Year of production: **>06/21**

| Pos. | Description | Article Number | Price | PU |
|---|---|---|---|---|
| 1 | handle | 94277700 | £ 96,00 | 1 |
| 2 | screw cover | 93735700 | £ 9,00 | 1 |
| 3 | escutcheon | 94027700 | £ 38,00 | 1 |
| 4 | nut | 93995000 | £ 25,00 | 1 |
| 5 | O-ring 35x1,5 | 92114000 | £ 6,10 | 1 |
| 6 | cartridge, assy | 93897000 | £ 79,00 | 1 |
| 7 | seal | 95008000 | £ 9,00 | 1 |
| 8 | O-ring 35x2 | 92604000 | £ 6,10 | 1 |
| 9 | adapter for cartridge | 98750000 | £ 13,30 | 1 |
| 10 | O-Ring 30x2 | 98186000 | £ 3,30 | 1 |
| 11 | spray former | 94275000 | £ 43,00 | 1 |
| 12 | connection hose 600 mm M8x0,75 G3/8 | 96556000 | £ 25,00 | 1 |
| 13 | O-ring 6,6x1,6 | 93019000 | £ 3,30 | 1 |
| 14 | flat seal | 98749000 | £ 6,10 | 1 |
| 15 | fixing set (Ø 32) | 13961000 | £ 25,00 | 1 |
| 16 | lever collar | 97548000 | £ 3,30 | 1 |
| 17 | pull rod | 96657000 | £ 13,30 | 1 |
| a | pop up waste | 94139700 | £ 163,00 | 1 |
| b | fixation extension 35 mm | 13898000 | £ 79,00 | 1 |

www.divapor.com