Rebris E
Single lever bath mixer for concealed installation
Finish: **Chrome** Article Number: **72468007**

Description

product features

- 2 functions
- flow rate upper outlet: 20 l/min
- flow rate lower outlet: 20 l/min
- maximum flow rate at 3 bar: 20 l/min
- flow rate for bath spout at 3 bar: 20 l/min
- flow rate of hand shower at 3 bar: 10 l/min
- ceramic cartridge
- temperature limitation adjustable
- non-return valve
- connection type: basic set
- wall-mounted
- max. operating pressure: 10 bar

Design awards

iF DESIGN AWARD 2022

reddot winner 2022

ICONIC AWARDS 2022 INNOVATIVE ARCHITECTURE winner

GERMAN DESIGN AWARD WINNER 2023

Product image

Scale drawing

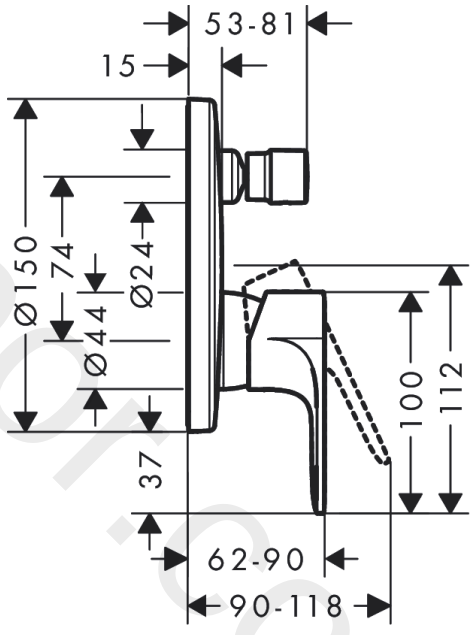

Flowchart

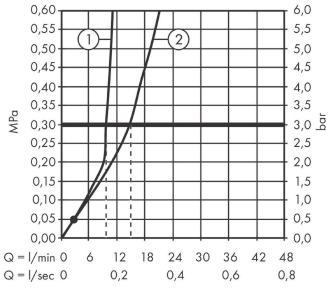

① Shower outlet
② Tub outlet

www.divapor.com

Rebris E
Single lever bath mixer for concealed installation
Finish: **Chrome** Article Number: **72468007**

Exploded Drawing

Year of production: **>10/22**

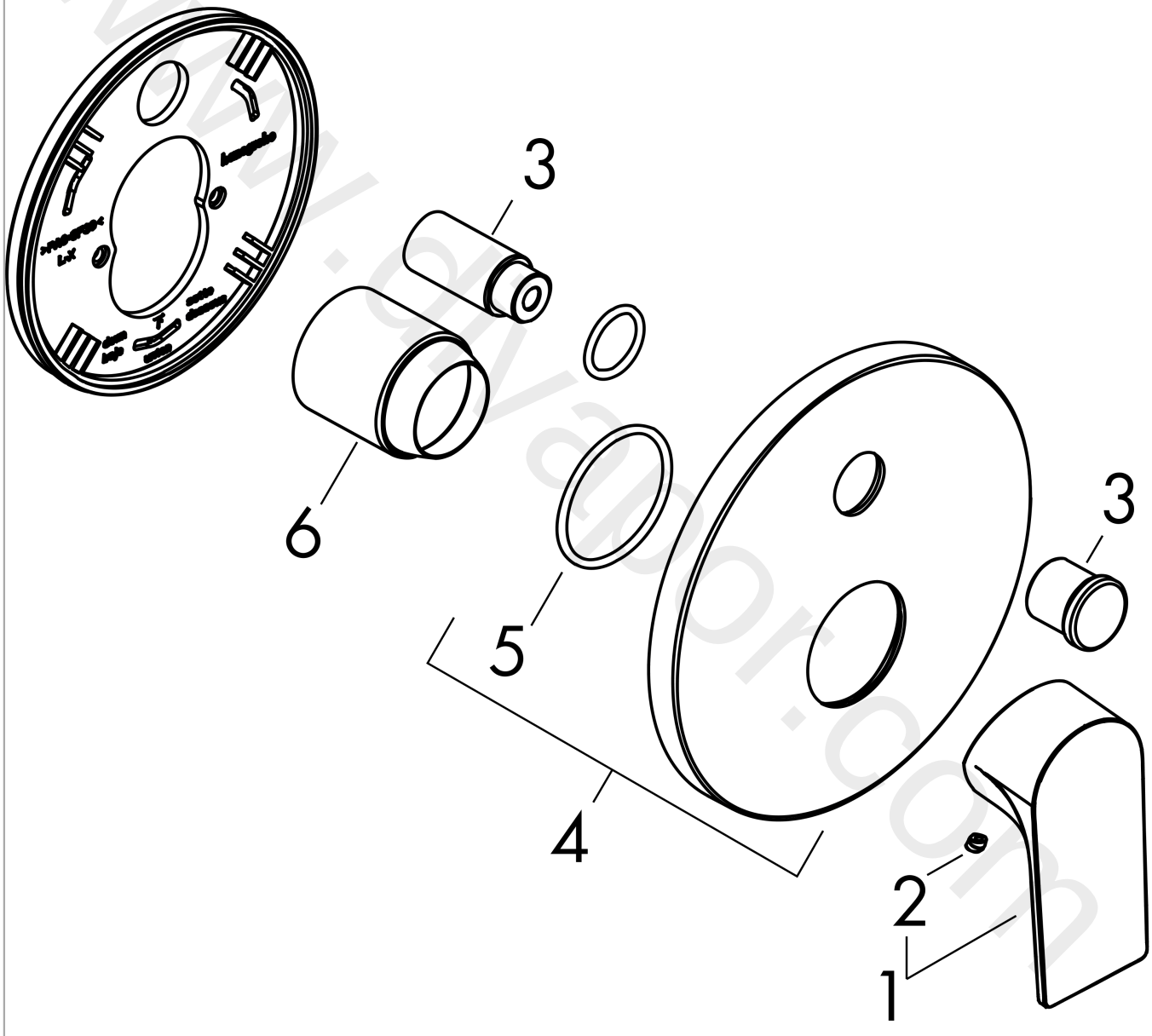

www.plvaapor.com

Rebris E
Single lever bath mixer for concealed installation
Finish: **Chrome** Article Number: **72468007**

Spare part list

Year of production: **>10/22**

Pos.	Description	Article Number	Price	PU
1	handle	94655000	£ 51,00	1
2	screw cover	96338000	£ 3,30	1
3	selector	93722000	-	1
4	escutcheon	93723000	-	1
5	O-ring 44x2,5	98162000	£ 3,30	1
6	sleeve	94291000	-	1
a	-	71465187	-	1

www.divapor.com