hansgrohe

Talis E
Single lever bath mixer for exposed installation
Finish: **Matt Black** Article Number: **71740670**

Description

product features

- 2 functions
- projection: 194 mm
- centre distance: 150 ± 12 mm
- spray type mixer: normal spray
- maximum flow rate at 3 bar: 19,2 l/min
- flow rate for bath spout at 3 bar: 19,2 l/min
- flow rate of hand shower at 3 bar: 16,8 l/min
- ceramic cartridge
- temperature limitation adjustable
- diverter with automatic resetting
- with silencer
- suitable for continous flow water heaters
- connection dimension: DN15
- connection type: s-shaped connections
- wall-mounted

Article Details

Price excl. VAT 303,30 £

Technology

AirPower

Quick Clean

Design awards

ICONIC AWARDS 2020 INNOVATIVE ARCHITECTURE best of best

iF DESIGN AWARD 2020

GERMAN DESIGN AWARD WINNER 2021

Product image

Scale drawing

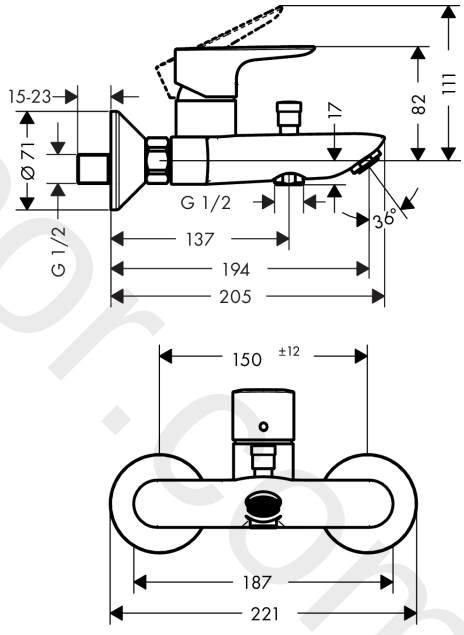

www.divapor.com

Talis E
Single lever bath mixer for exposed installation
Finish: **Matt Black** Article Number: **71740670**

Flowchart

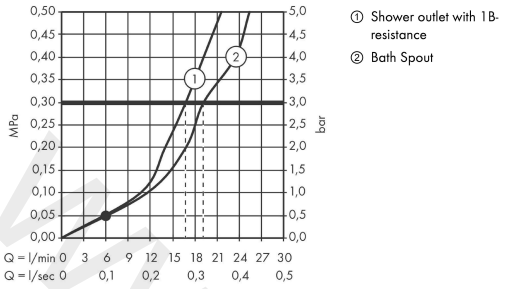

www.divapor.com

Talis E
Single lever bath mixer for exposed installation
Finish: **Matt Black** Article Number: **71740670**

Exploded Drawing

Year of production: **>08/19**

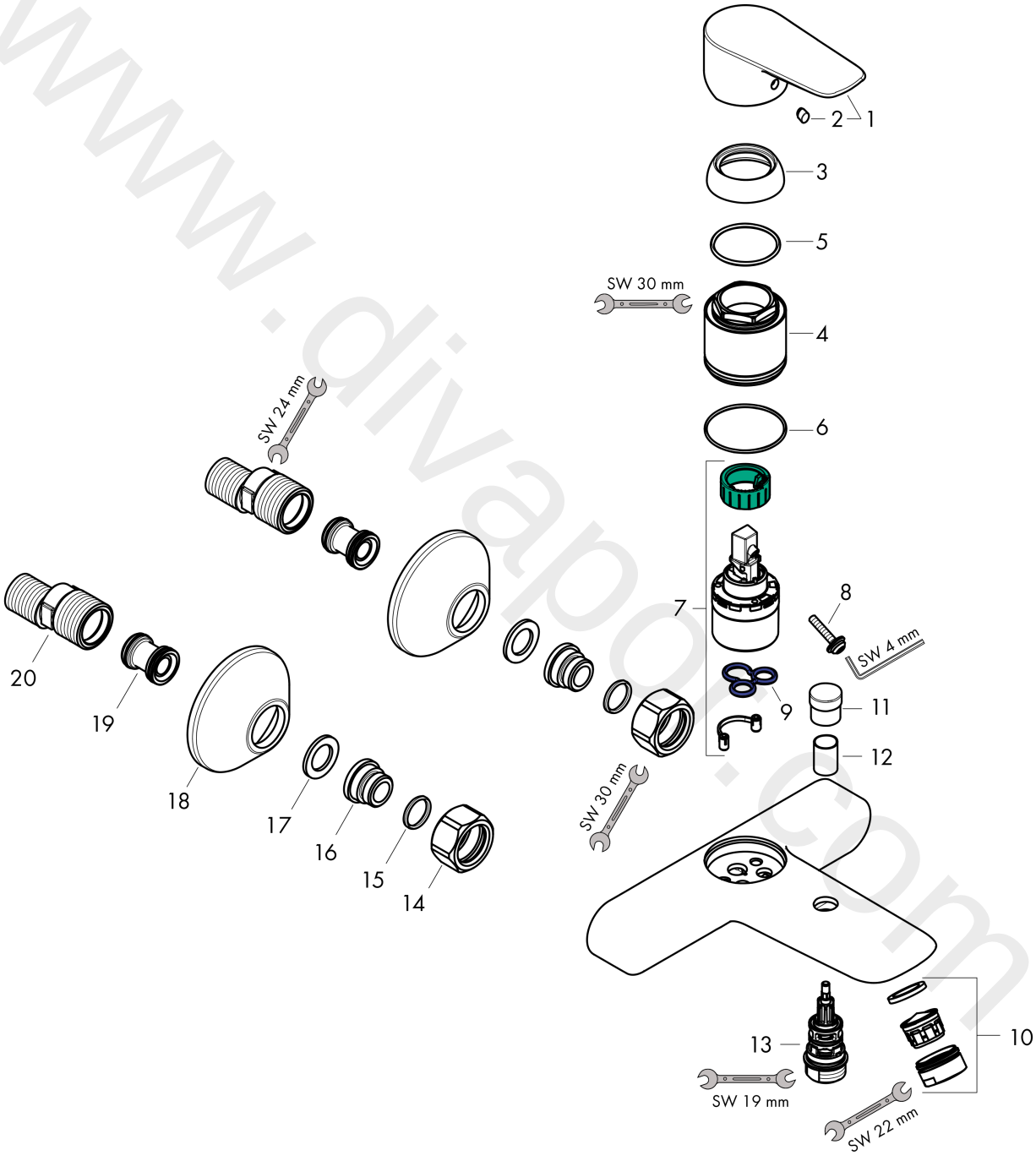

www.divapoor.com

Talis E
Single lever bath mixer for exposed installation
Finish: **Matt Black** Article Number: **71740670**

Spare part list

Year of production: **>08/19**

Pos.	Description	Article Number	Price	PU
1	handle	92666670	£ 51,00	1
2	screw cover	96338000	£ 3,30	1
3	flange	97406670	£ 33,00	1
4	nut	97977670	£ 64,00	1
5	O-Ring 32x2	98193000	£ 3,30	1
6	O-ring 33x1,5	98164000	£ 3,30	1
7	cartridge, assy	92730000	£ 35,00	1
8	locking screw for handle	95140000	£ 6,10	1
9	seal	95008000	£ 9,00	1
10	aerator M24x1 (30 l/min)	96512670	£ 25,00	1
11	diverter knob	97981670	£ 33,00	1
12	sleeve	97979670	£ 25,00	1
13	selector	97978000	£ 64,00	1
14	set of nuts	96157670	£ 51,00	1
15	connecting thread	97220000	£ 16,10	1
16	O-ring 15x2	98163000	£ 3,30	1
17	filter packing	96922000	£ 9,00	1
18	escutcheon Ø 70 mm	94135670	£ 19,80	1
19	noise reduction	96429000	£ 6,10	1
20	set of S-unions (±12 mm)	94140000	£ 51,00	1

www.divapor.com