Talis E
Single lever basin mixer 240 without waste set
Finish: **Matt Black** Article Number: **71717673**

Description

product features

- ComfortZone 190
- projection: 166 mm
- spout height: 234 mm
- handle variant: lever handle
- spray type: normal spray
- maximum flow rate at 3 bar: 5 l/min
- ceramic cartridge
- temperature limitation adjustable
- suitable for continuous flow water heaters
- connection type: G ½ connections
- connection dimension: DN15

Technology

AirPower | EcoSmart | Comfort Zone | Quick Clean

Product image

Scale drawing

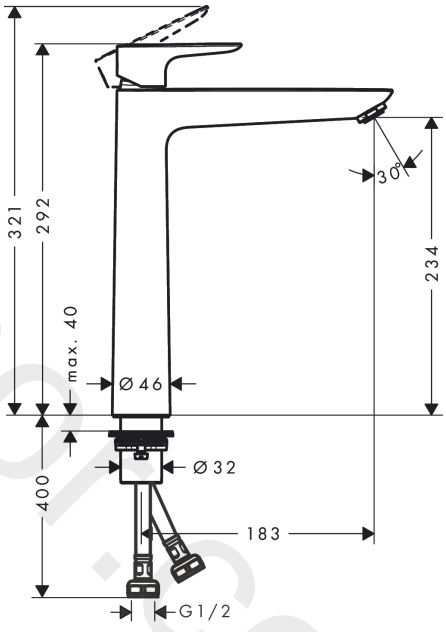

Flowchart

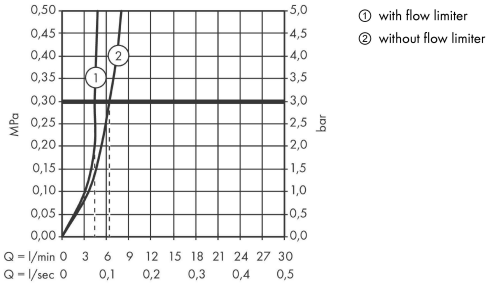

www.divapor.com

Talis E
Single lever basin mixer 240 without waste set
Finish: **Matt Black** Article Number: **71717673**

Exploded Drawing

Year of production: **>10/19**

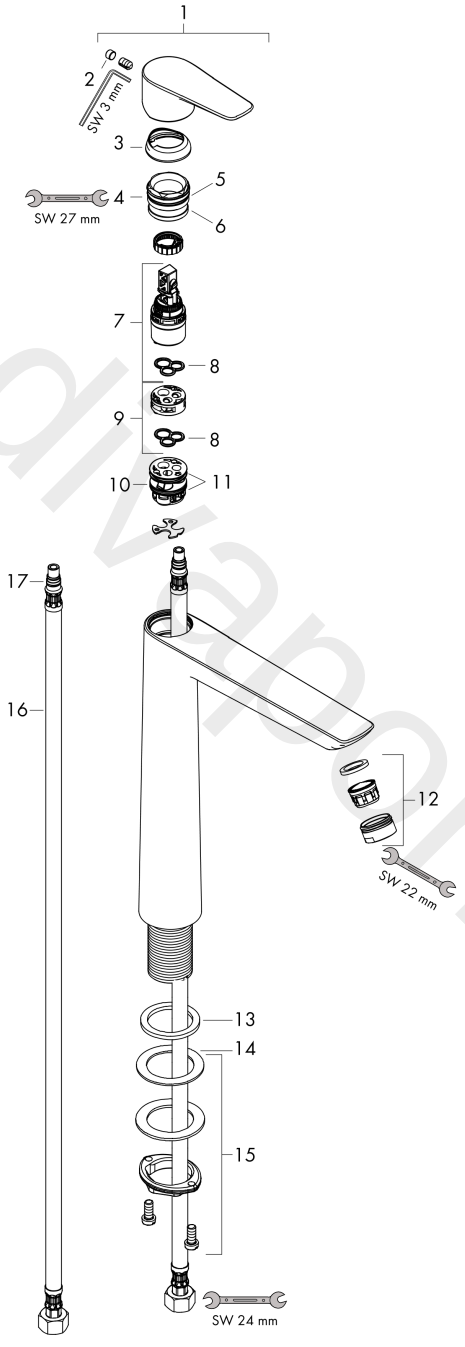

www.dlvapor.com

Talis E
Single lever basin mixer 240 without waste set
Finish: **Matt Black** Article Number: **71717673**

Spare part list

Year of production: **>10/19**

Pos.	Description	Article Number	Price	PU
1	handle	92687670	£ 76,00	1
2	screw cover	95704000	£ 3,30	1
3	flange	92625670	£ 51,00	1
4	nut	92689000	£ 25,00	1
5	O-ring 25x1,5	98146000	£ 3,30	1
6	O-ring 27x1,5	92527000	£ 13,30	1
7	cartridge, assy	97685000	£ 64,00	1
8	seal	98865000	£ 35,00	1
9	adapter for cartridge	92628000	£ 20,50	1
10	adapter for cartridge	98866000	£ 35,00	1
11	O-ring 23x2	98398000	£ 3,30	1
12	aerator M24x1 (5 l/min)	13185670	£ 33,00	1
13	flat seal	98749000	£ 6,10	1
14	lever collar	97548000	£ 3,30	1
15	fixing set (Ø 32)	13961000	£ 25,00	1
16	connection hose 600 mm M8x0,75 G1/2	92482000	£ 43,00	1
17	O-ring 7x1,5	98422000	£ 3,30	1
a	fixation extension 35 mm	13898000	£ 79,00	1

www.divapor.com