hansgrohe

ZH 用户手册 / 组装说明 2

EN Instructions for use / assembly instructions 3

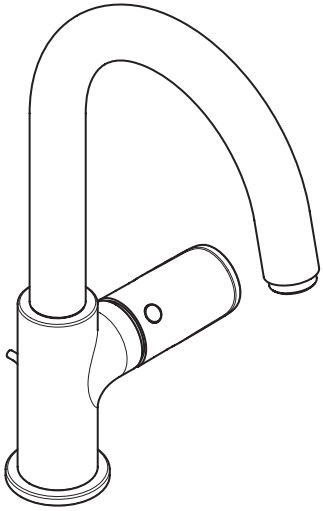

Vernis Blend 210

71554007

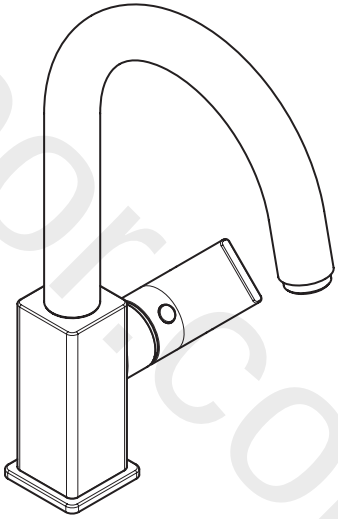

Vernis Shape 210

71564007

www.divaporcon

安全技巧

⚠ 装配时为避免挤压和切割受伤, 必须戴上手套.
⚠ 本产品只允许作为洗浴, 卫生和洁身之用.
⚠ 冷热水管间过大的压力差必须予以平衡.

安装提示

- 安装前必须检查产品是否受到运输损害. 安装后将不认可运输损害或表面损伤.
- 管道和阀门必须根据通用标准进行安装, 冲洗和检查.
- 请遵守当地国家现行的安装规定.
- 只能按规定使用溢流阀. 禁止将半露柱及其他部件固定到溢流阀上.
- 阀门不可与即热式热水器连接使用.

技术参数

工作压强:	最大 1 MPa
推荐工作压强:	0,1 - 0,5 MPa
测试压强:	1,6 MPa
	(1 MPa = 10 bar = 147 PSI)
热水温度:	最大 60°C
热力消毒:	70°C / 4 分钟

该产品专为饮用水设计!

符号说明

请勿使用含有乙酸的硅胶!

调节 (参见第页 7)

热水温度调节. 如果使用即热式喷头, 则不建议安装热水阀门.

大小 (参见第页 8)

流量示意图 (参见第页 8)

备用零件 (参见第页 13)

选装附件 (不在供货范围内)

水管胶泥 (参见第页 5)

清洗 (参见第页 10)

操作 (参见第页 9)

汉斯格雅建议, 清晨或在水流长时间停滞后, 前半升水不作饮用水使用.

www.divapor.com

安装 (参见第页 4)

Safety Notes

⚠ Gloves should be worn during installation to prevent crushing and cutting injuries.
⚠ The product may only be used for bathing, hygienic and body cleaning purposes.
⚠ The hot and cold supplies must be of equal pressures.

Installation Instructions

- Prior to installation, inspect the product for transport damages. After it has been installed, no transport or surface damage will be honoured.
- The pipes and the fixture must be installed, flushed and tested as per the applicable standards.
- The plumbing codes applicable in the respective countries must be observed.
- The drain valve must only be used as intended. It is not allowed to attach other objects to the drain valve, for example a semi-pedestal.
- The mixer can not used together with a continuous flow water heater.

Technical Data

Operating pressure:	max. 1 MPa
Recommended operating pressure:	0,1 - 0,5 MPa
Test pressure:	1,6 MPa
	(1 MPa = 10 bar = 147 PSI)
Hot water temperature:	max. 60°C
Thermal disinfection:	70°C / 4 min

The product is exclusively designed for drinking water!

Symbol description

Do not use silicone containing acetic acid!

Adjustment (see page 7)

To adjust the hot water limiter. Using a hot water limiter in combination with a continuous flow water heater is not recommended.

Dimensions (see page 8)

Flow diagram (see page 8)

Spare parts (see page 13)

Special accessories (order as an extra)

Installation putty (see page 5)

Cleaning (see page 10)

Operation (see page 9)

Hansgrohe recommends not to use as drinking water the first half liter of water drawn in the morning or after a prolonged period of non-use.

Assembly (see page 4)

www.dwapor.com

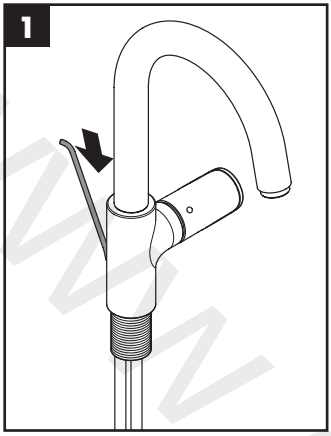

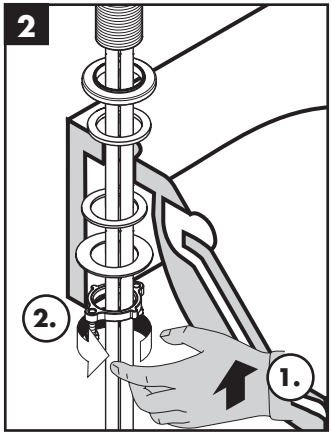

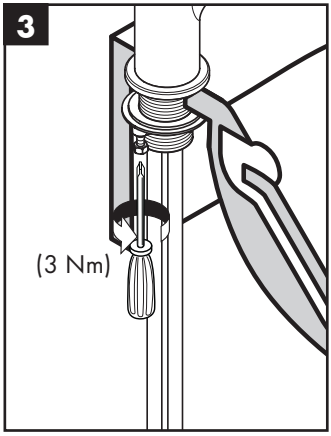

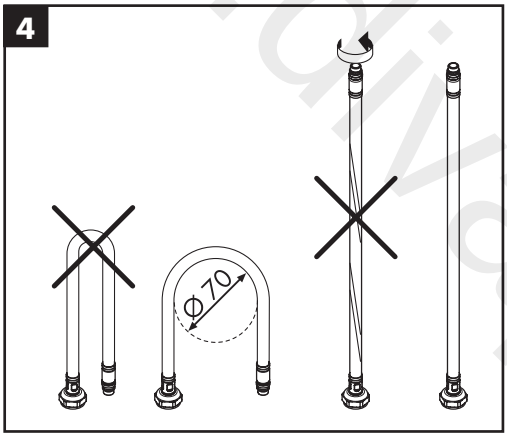

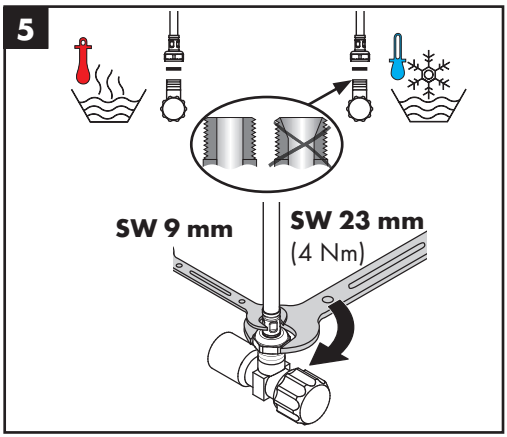

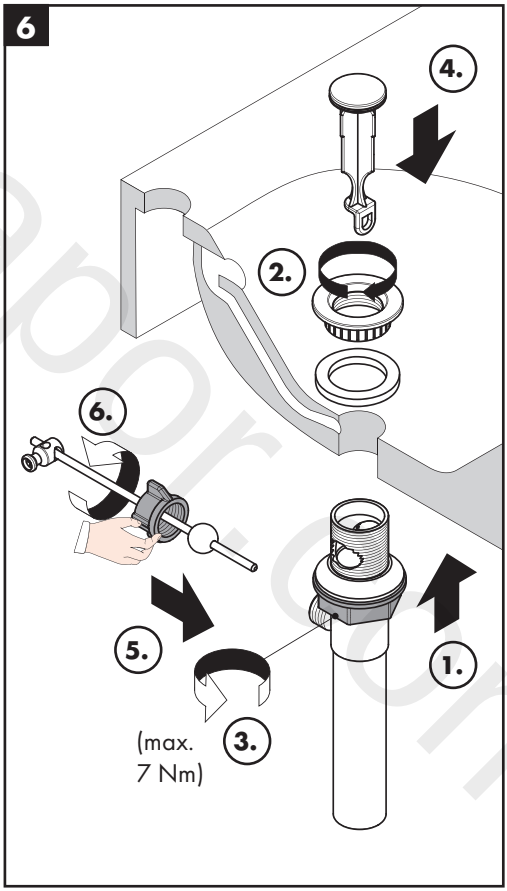

www.diyvapor.com

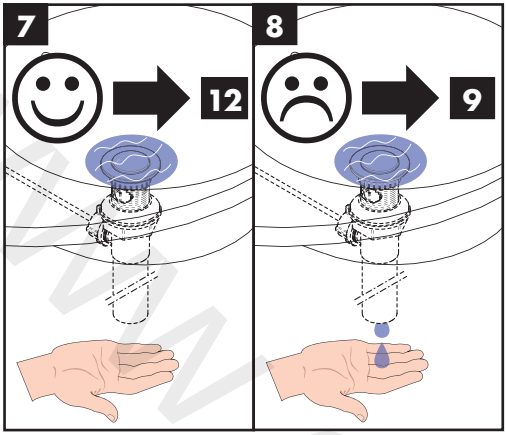

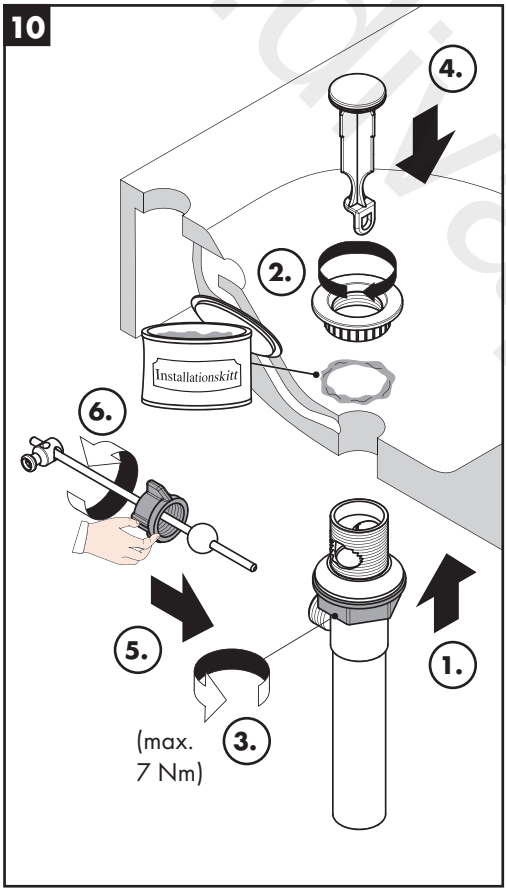

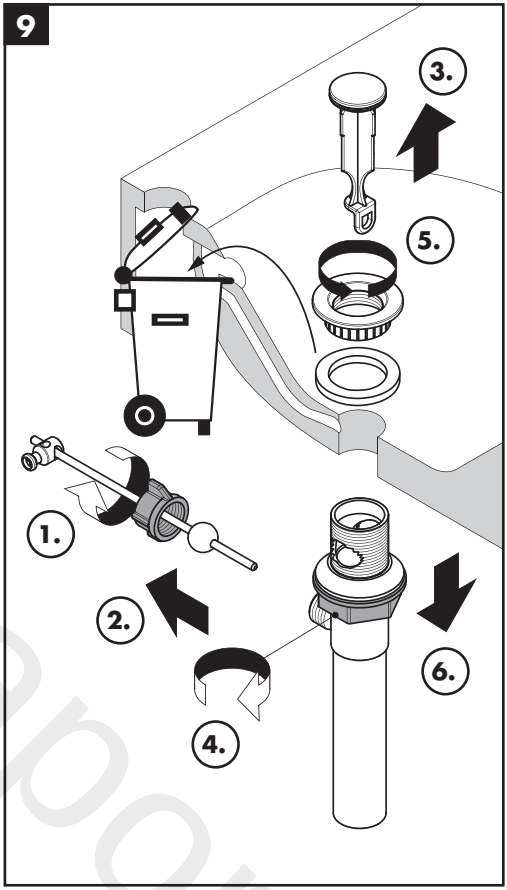

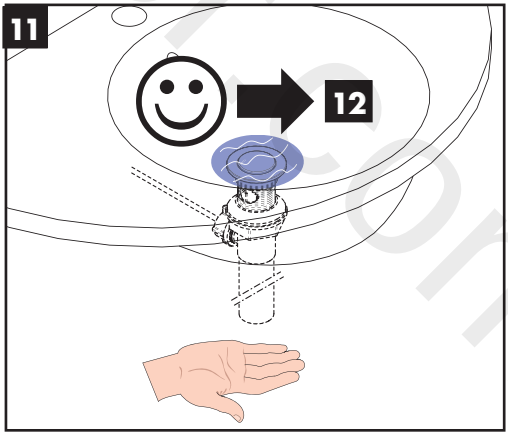

www.diyvapor.com

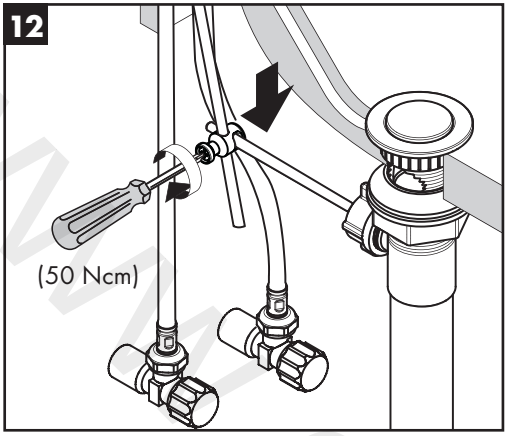

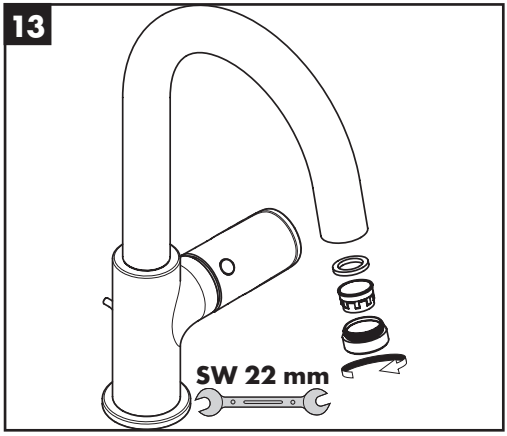

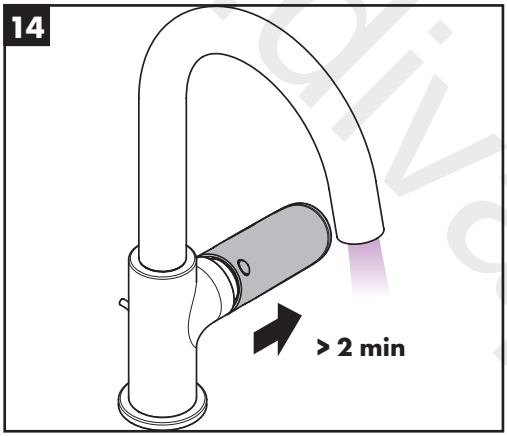

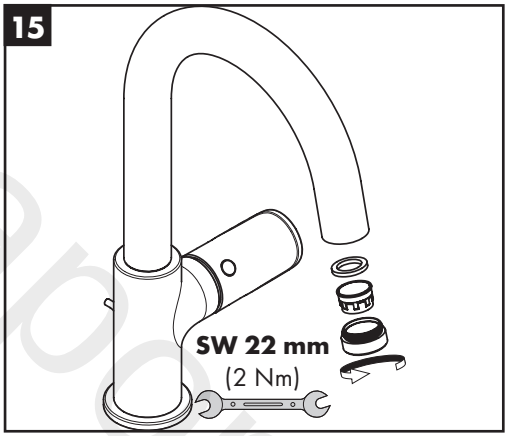

www.divapoor.com

60 °C

10 °C

0,3 MPa

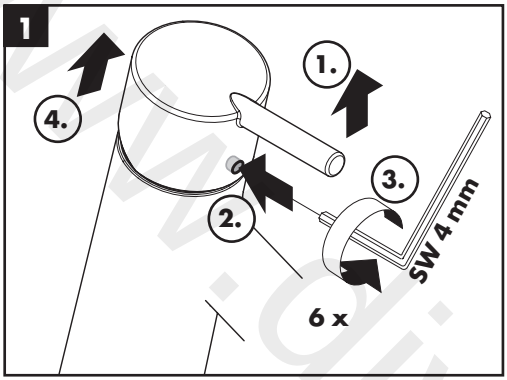

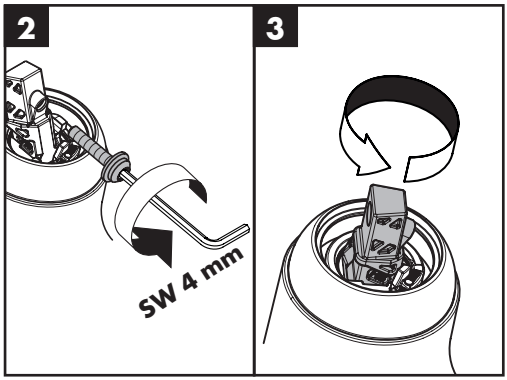

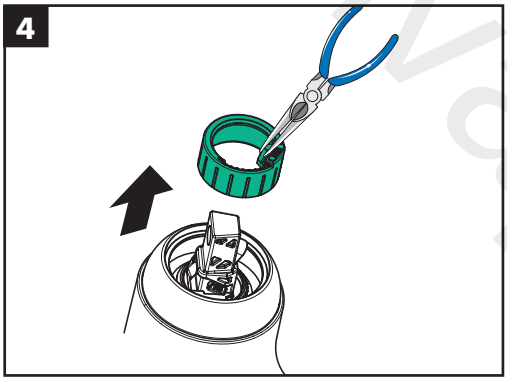

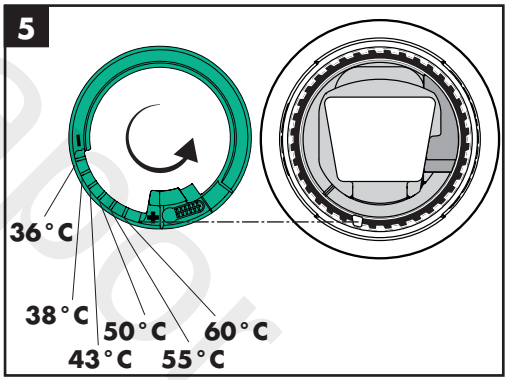

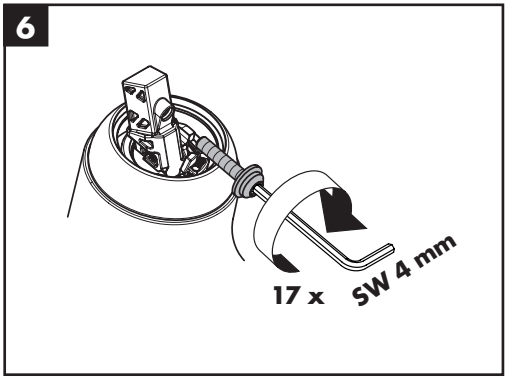

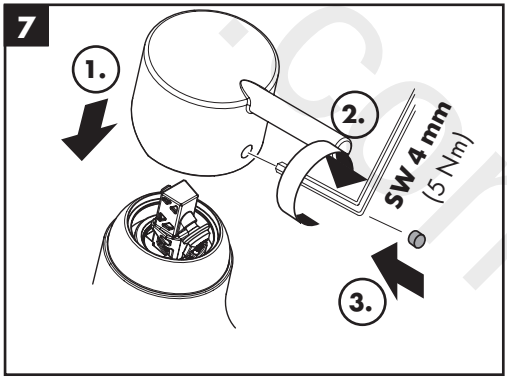

www.diyapps.com

Vernis Blend 210
71554007

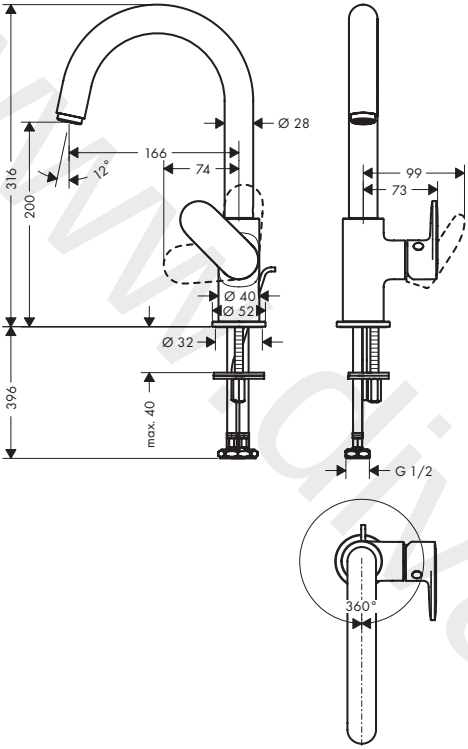

Vernis Shape 210
71564007

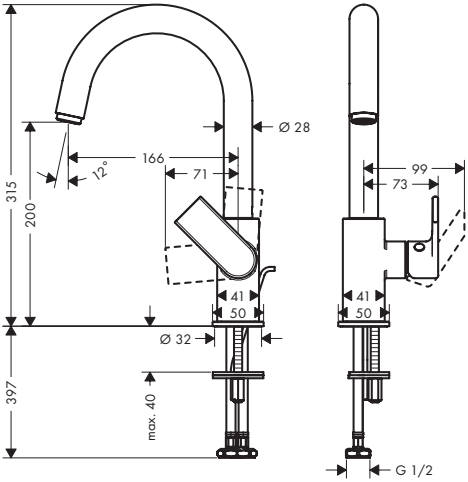

94159007

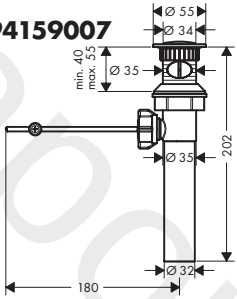

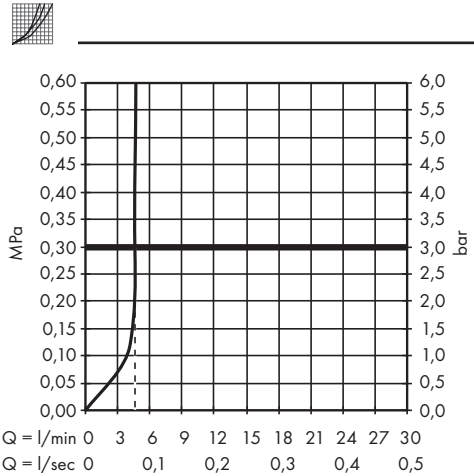

www.divapor.com

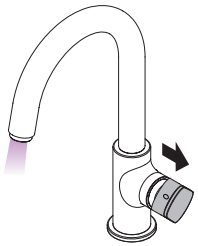

开 / open

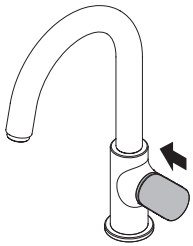

关 / close

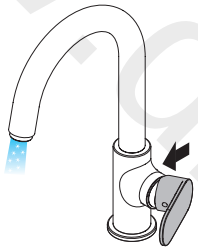

冷 / cold

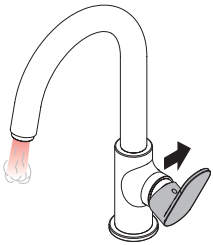

热 / hot

www.divapor.com

汉斯格雅产品的清洁建议

现代的卫浴龙头, 厨房龙头, 花洒, 配件, 盥洗台, 浴盆和加热器采用的制造材料非常迥异, 以适应产品外形设计和使用功能的市场需求.

为了避免产品损坏和由此引发的投诉及争议, 必须在使用和清洁产品时遵循有关规程.

在保养汉斯格雅产品时, 原则上必须注意:

- 只能使用那些有明确注明是适用于本产品的清洁剂.
- 不允许使用含有盐酸, 蚁酸, 氯漂或醋酸的清洁剂, 因为这些清洁剂会给产品表面造成严重的损伤.
- 含磷酸的清洁剂必须在特定条件下使用.
- 不允许将两种以上清洁剂混合使用.
- 不允许使用具有研磨作用的清洁工具和设备, 如不适合的清洁粉末, 海绵垫或超细麦克布.
- 必须严格遵守清洁剂生产厂商的使用说明.
- 严格遵守清洁剂的用量和作用时间, 决不允许清洁剂的作用时间长于规定值.
- 定期的清洁以预防水垢.
- 不允许将清洁剂直接喷射到汉斯格雅产品上, 因为喷雾会进入汉斯格雅产品的开口部分和缝隙中而造成损害. 首先将清洁剂喷在软布上, 再用软布进行清洁.
- 清洁之后必须用足够的清水冲洗, 以彻底去除残留的吸附物(清洁剂).
- 不允许使用蒸汽清洗机, 高温会损害产品.

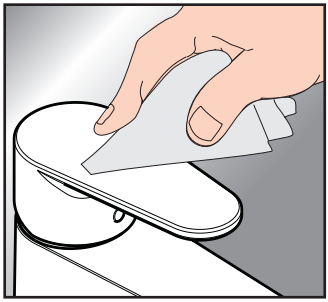

重要说明

肥皂, 洗发水, 沐浴液, 染发剂, 香水, 刮胡水, 指甲油的残留也会对产品造成损伤.

此处: 使用后要小心地用清水将剩余物冲洗干净.

同样在产品下方不得存放洗涤剂和化学药品, 例如不可放在用于洗脸盆的梳洗柜中否则挥发气体将损坏产品.

在已经损伤的表面继续使用清洁剂会给表面造成更大的损伤.

表面损坏的部件必须更换, 否则会有受伤的危险.

不按规定进行清洁而造成的任何损坏不在本公司产品保修范围之内.

担保

Hansgrohe 向用户保证, 该产品无制造 缺陷. 如果自购买之日起五年内出现缺 陷, Hansgrohe 将免费排除. 保证条件和详 情见 www.hansgrohe-int.com/guarantee. 在提 出保修的权利时请联系您的合同方. 本保证 不涉及有关国家法律规定的消费权

www.vapor.com

Cleaning Recommendation for Hansgrohe Products

Today, modern sanitary and kitchen tapware, showers, accessories, washstands, tubs and radiators consist of very different materials to comply with the needs of the market with regard to design and functionality.

To avoid damage and reclamations, it is necessary to consider certain criteria when cleaning.

With regard to caring for the Hansgrohe products, the following must in principle be heeded:

- Only use cleaning material which is explicitly provided for this type of application.
- Never use cleaning materials, which contain hydrochloric acid, formic acid, chlorine pale lye or acetic acid, as they cause considerable damage.
- Phosphorus acidic cleaners are only conditionally applicable.
- Mixing cleaning agents is not permitted, generally.
- Never use cleaning materials or appliances with an abrasive effect, such as unsuitable cleaning powders, sponge pads or micro fibre cloths.
- The instructions of the cleaning agent manufacturers have to be followed absolutely.
- Cleaning has to be carried out with a specified cleaner dosage, contact time, object-related and adapted to the needs.
- The building up of calcifications has to be removed by cleaning regulary.
- When using spray cleaners, spray the cleaning solution onto a soft cloth or sponge, never directly onto the Hansgrohe products, as the atomised spray could enter openings and gaps in the Hansgrohe products and cause damage.
- After cleaning rinse thoroughly with clean water to remove any cleaner residue.
- The use of steam cleaners is not permitted. The high temperatures can damage the products.

Important

Residues of toiletries such as liquid soaps, shampoos and shower gels, hair dyes, perfumes, aftershave and nail varnish can also cause damage.

Here too: Carefully rinse with water after use to remove residues.

Likewise, do not store any cleaning agents or chemicals under the products, for example in a vanity unit, as the vapours may damage the products.

The damage of already damaged surfaces will deteriorate under the effect of the cleansers.

Components with damaged surfaces must be exchanged, otherwise there could be an injury danger.

Damage caused by improper treatment will not be covered by our guarantee.

Warranty

Hansgrohe guarantees to the consumer that this product is free of production faults. If evertheless any defect is detected within 5 years from date of purchase, Hansgrohe will remedy this defect free of charge. You will find the conditions and details of this guarantee at www.hansgrohe-int.com/guarantee. Please contact your contracting party to claim your rights under this guarantee. This guarantee does not affect the customer's rights under the respective national legislation.

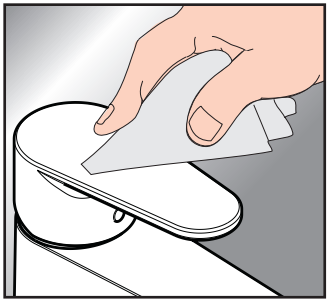

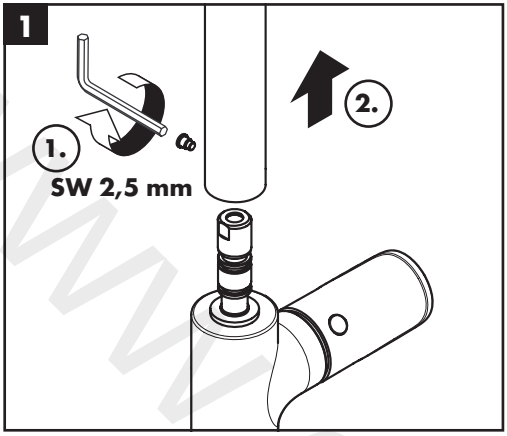

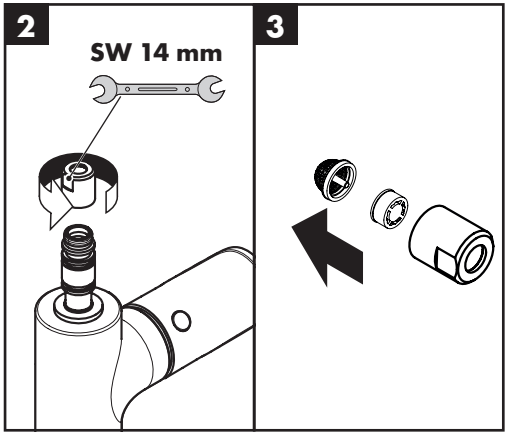

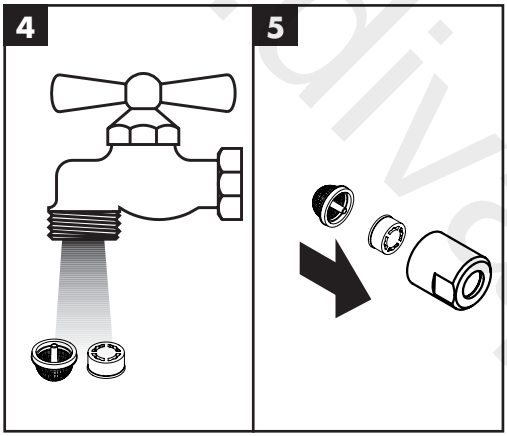

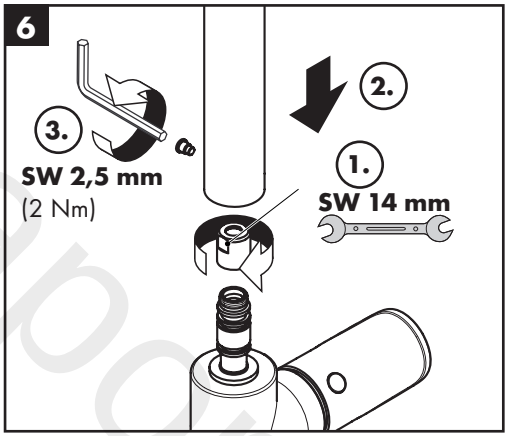

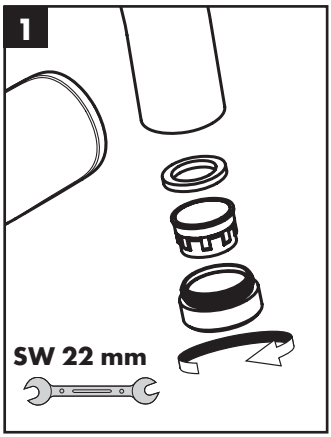

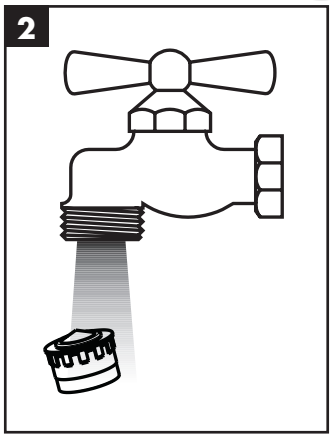

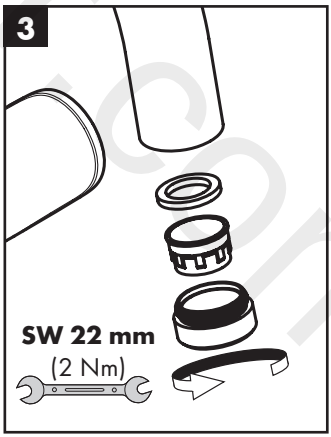

www.diyladder.com

Vernis Blend 210
71554007

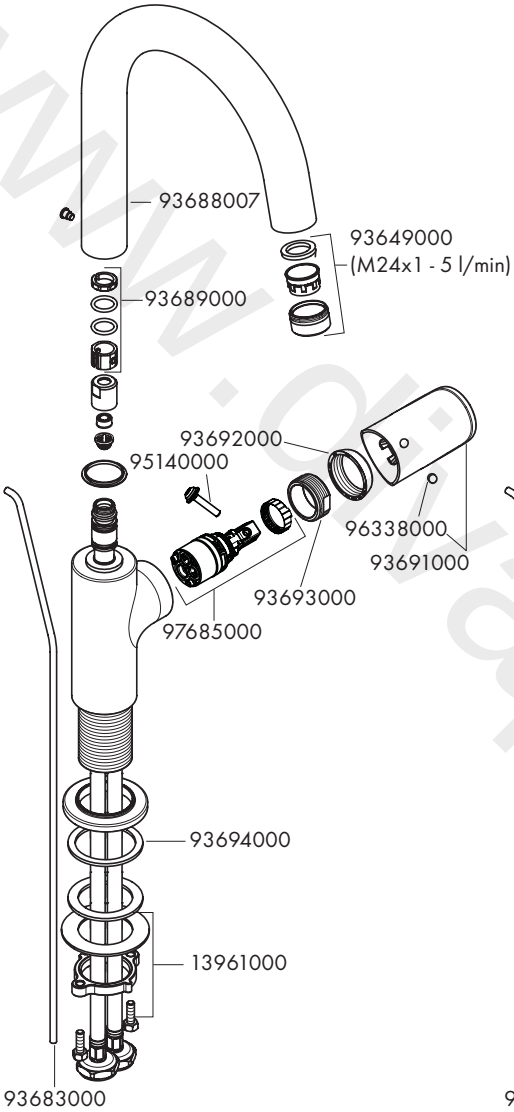

Vernis Shape 210
71564007

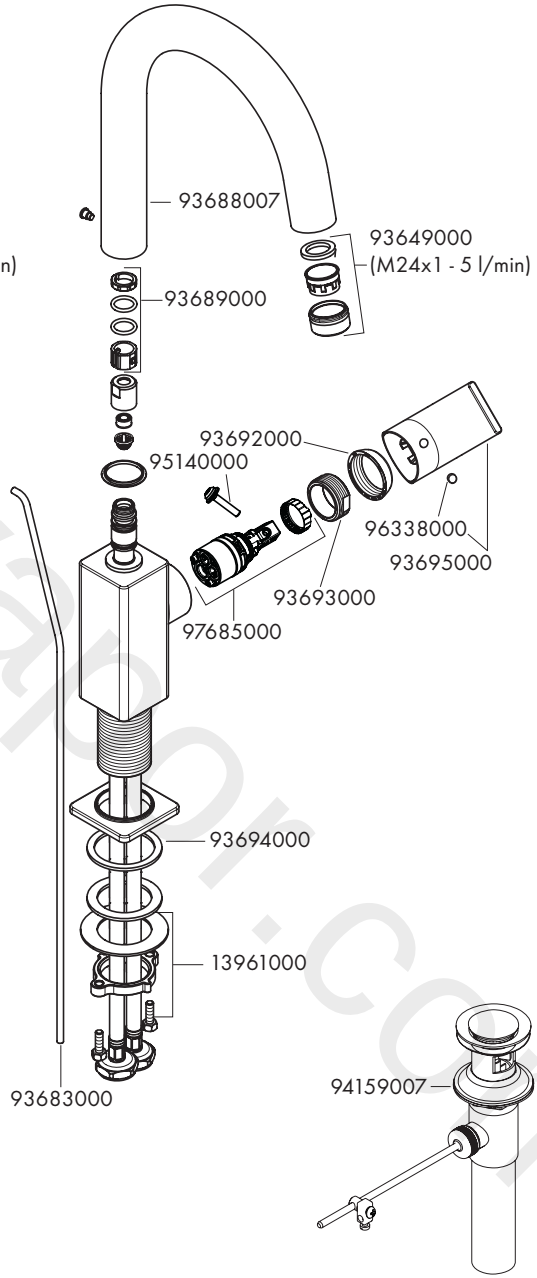

www.oliveapon.com

www.divapor.com

www.divapor.com

www.divapor.com

hansgrohe
Hansgrohe · Auestraße 5 - 9 · D-77761 Schiltach · Telefon +49 (0) 78 36/51-1282 · Telefax +49 (0) 7836/511440
E-Mail: info@hansgrohe.com · Internet: www.hansgrohe.com

11/2022
9.07166.51 R02