MyCube
Single lever shower mixer for concealed installation
Finish: **Chrome** Article Number: **71265000**

Description

product features

- 1 function
- maximum flow rate at 3 bar: 28 l/min
- ceramic cartridge
- temperature limitation adjustable
- suitable for continous flow water heaters
- min. operating pressure: 1 bar
- max. operating pressure: 10 bar
- connection type: basic set

Product image

Scale drawing

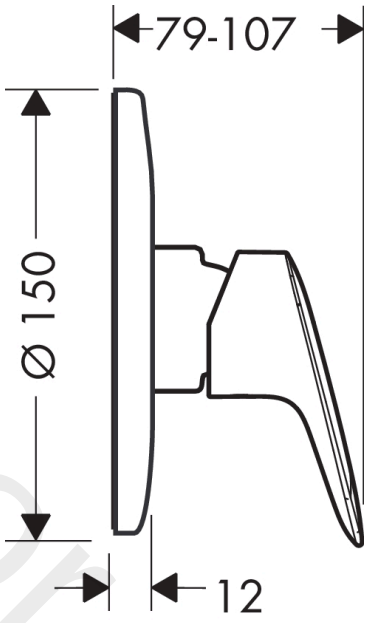

Flowchart

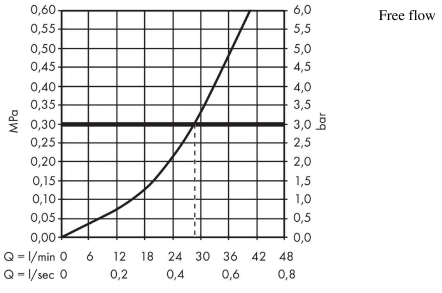

www.divapor.com

MyCube
Single lever shower mixer for concealed installation
Finish: **Chrome** Article Number: **71265000**

Exploded Drawing

Year of production: **>11/14**

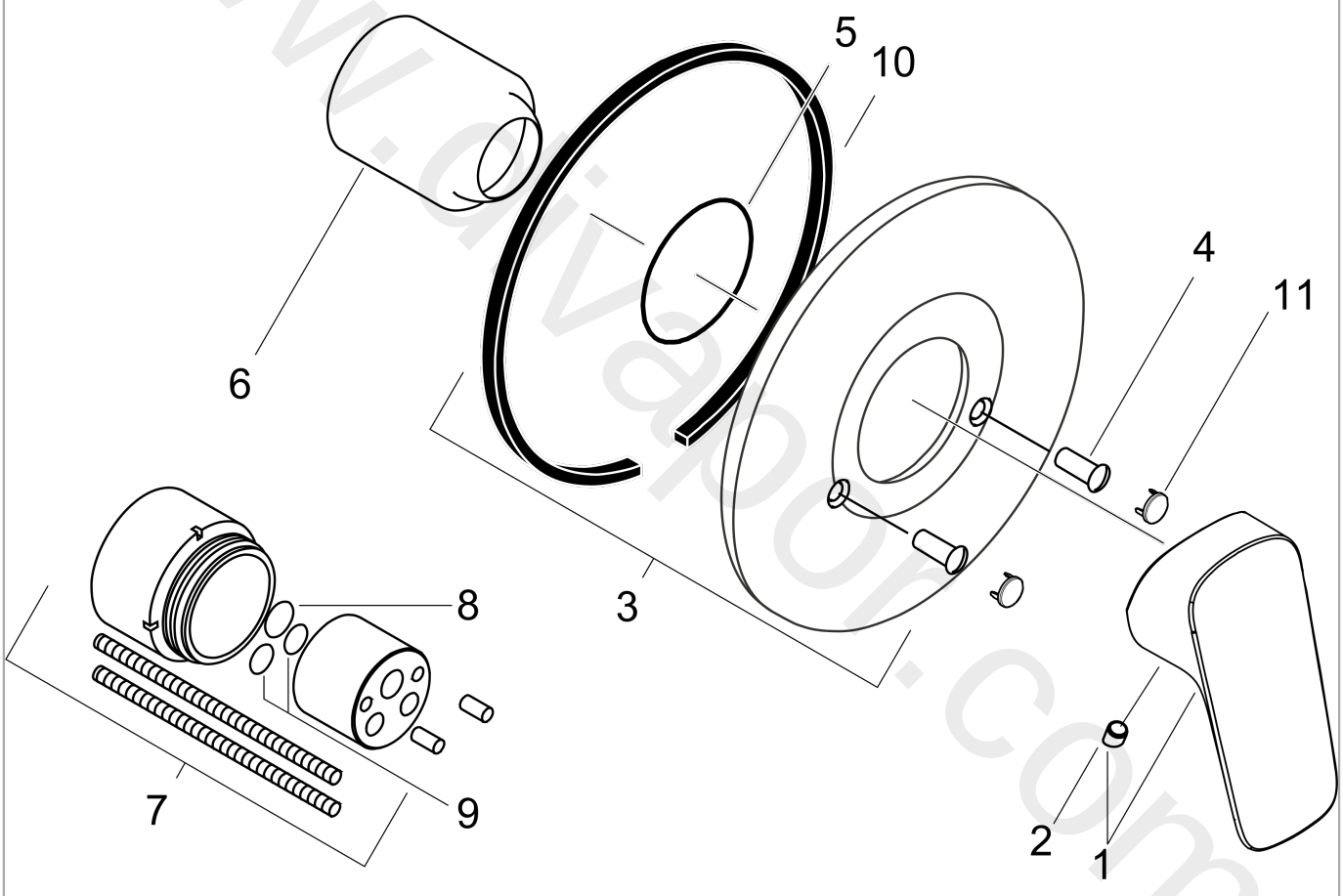

www.divapoor.com

MyCube
Single lever shower mixer for concealed installation
Finish: **Chrome** Article Number: **71265000**

Spare part list

Year of production: **>11/14**

Pos.	Description	Article Number	Price	PU
1	handle	92224000	£ 51,00	1
2	screw cover	96338000	£ 3,30	1
3	escutcheon Ø 150 mm	96555000	£ 64,00	1
4	hollow screw	96065000	£ 6,10	1
5	O-Ring 48x3	95508000	£ 3,30	1
6	flange	96348000	£ 13,30	1
7	extension set 28 mm shower mixer	32698000	£ 137,00	1
8	O-ring 10x1,5	98123000	£ 3,30	1
9	O-ring 12x1,5	98430000	£ 3,30	1
10	seal	97737000	£ 9,00	1
11	cover cap	95433000	£ 6,10	1
a	base body	13620180	£ 179,00	1

www.divapor.com