hansgrohe

Logis
Single lever basin mixer 110 Fine with pop-up waste set
Finish: **Chrome** Article Number: **71251000**

Description

product features

- consists of: single lever basin mixer, waste set
- ComfortZone 110
- projection: 121 mm
- spout height: 110 mm
- handle variant: lever handle
- spray type: normal spray
- maximum flow rate at 3 bar: 5 l/min
- ceramic cartridge
- temperature limitation adjustable
- suitable for continuous flow water heaters
- pop-up waste set G 1¼
- material waste set: synthetic
- connection type: G ⅜ connections
- connection dimension: DN15
- EU taxonomy: max. 6 l/min - Substantial Contribution (SC) possible
- WRAS 2306044
- WRAS 2306044 - Approval letter 2306044

Article Details

Price excl. VAT	123,33 £

Technology

Product image

Scale drawing

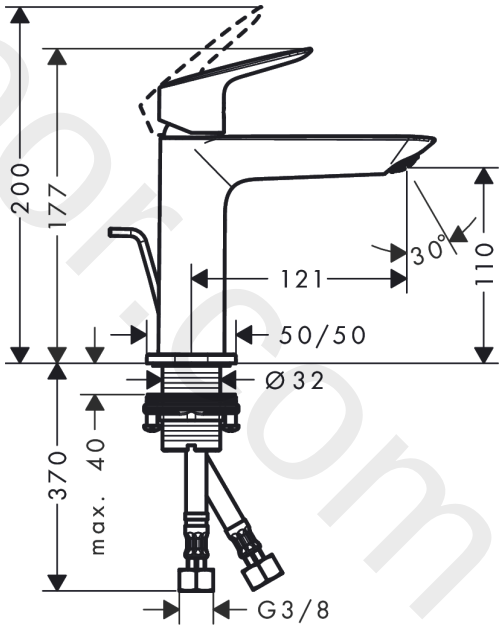

www.divaapp.com

Logis
Single lever basin mixer 110 Fine with pop-up waste set
Finish: **Chrome** Article Number: **71251000**

Flowchart

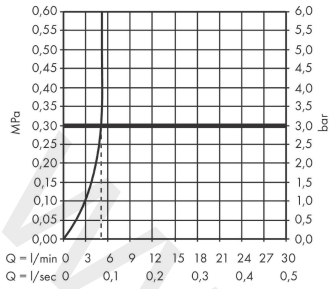

www.divapor.com

Logis
Single lever basin mixer 110 Fine with pop-up waste set
Finish: **Chrome** Article Number: **71251000**

Exploded Drawing

Year of production: **>05/21**

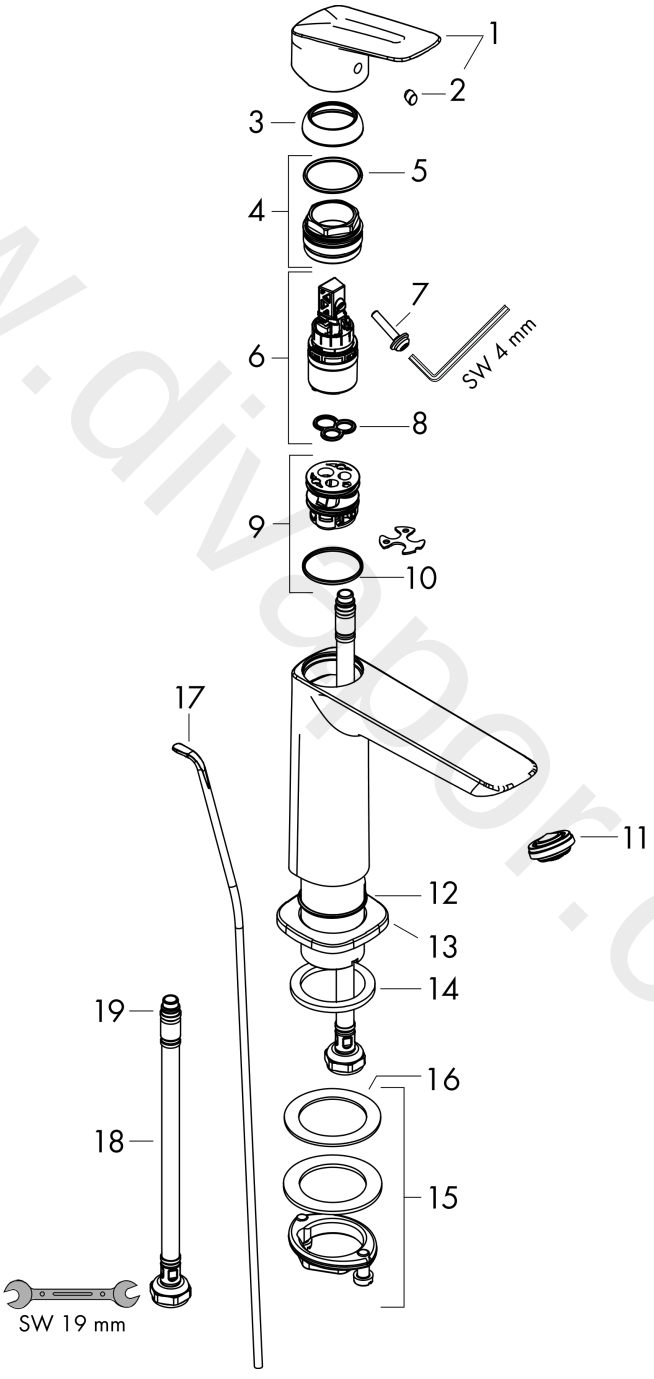

www.divoshop.com

Logis
Single lever basin mixer 110 Fine with pop-up waste set
Finish: **Chrome** Article Number: **71251000**

Spare part list

Year of production: **>05/21**

Pos.	Description	Article Number	Price	PU
1	handle	94376000	£ 64,00	1
2	screw cover	96338000	£ 3,30	1
3	flange	98863000	£ 51,00	1
4	nut	98864000	£ 43,00	1
5	O-ring 24x2	98388000	£ 3,30	1
6	cartridge, assy	97685000	£ 64,00	1
7	locking screw for handle	95140000	£ 6,10	1
8	seal	98865000	£ 35,00	1
9	adapter for cartridge	98866000	£ 35,00	1
10	O-ring 23x2	98398000	£ 3,30	1
11	aerator M24x1 (5 l/min)	94364000	£ 9,00	1
12	O-ring 30x1,5	98433000	£ 3,30	1
13	escutcheon	94382000	£ 35,00	1
14	flat seal	98749000	£ 6,10	1
15	fixing set (Ø 32)	13961000	£ 25,00	1
16	lever collar	97548000	£ 3,30	1
17	pull rod	96657000	£ 13,30	1
18	connection hose 450 mm M8x0,75 G3/8	97206000	£ 35,00	1
19	O-ring 6,6x1,6	93019000	£ 3,30	1
20	pop up waste	92168000	£ 43,00	1
21	fixation extension 35 mm	13898000	£ 79,00	1

www.divapor.com