Logis
Single lever basin mixer 70 LowFlow with pop-up waste set
Finish: **Chrome** Article Number: **71078000**

Description

product features

- consists of: single lever basin mixer, waste set
- ComfortZone 70
- projection: 107 mm
- spout height: 67 mm
- handle variant: lever handle
- spray type: normal spray
- maximum flow rate at 3 bar: 3,5 l/min
- ceramic cartridge
- temperature limitation adjustable
- suitable for continuous flow water heaters
- pop-up waste set G 1¼
- material waste set: synthetic
- connection type: G ⅜ connections
- connection dimension: DN15

Article Details

Price excl. VAT	93,33 £

Technology

Product image

Scale drawing

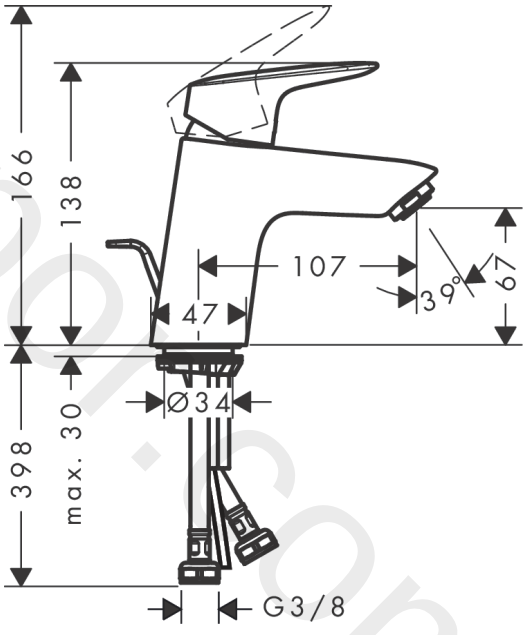

www.divaapart.com

Logis
Single lever basin mixer 70 LowFlow with pop-up waste set
Finish: **Chrome** Article Number: **71078000**

Flowchart

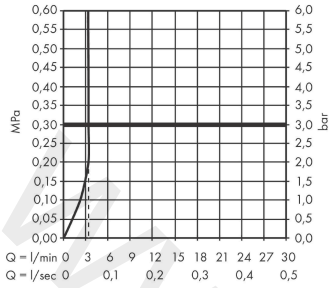

www.divapor.com

Logis
Single lever basin mixer 70 LowFlow with pop-up waste set
Finish: **Chrome** Article Number: **71078000**

Exploded Drawing

Year of production: **>05/17**

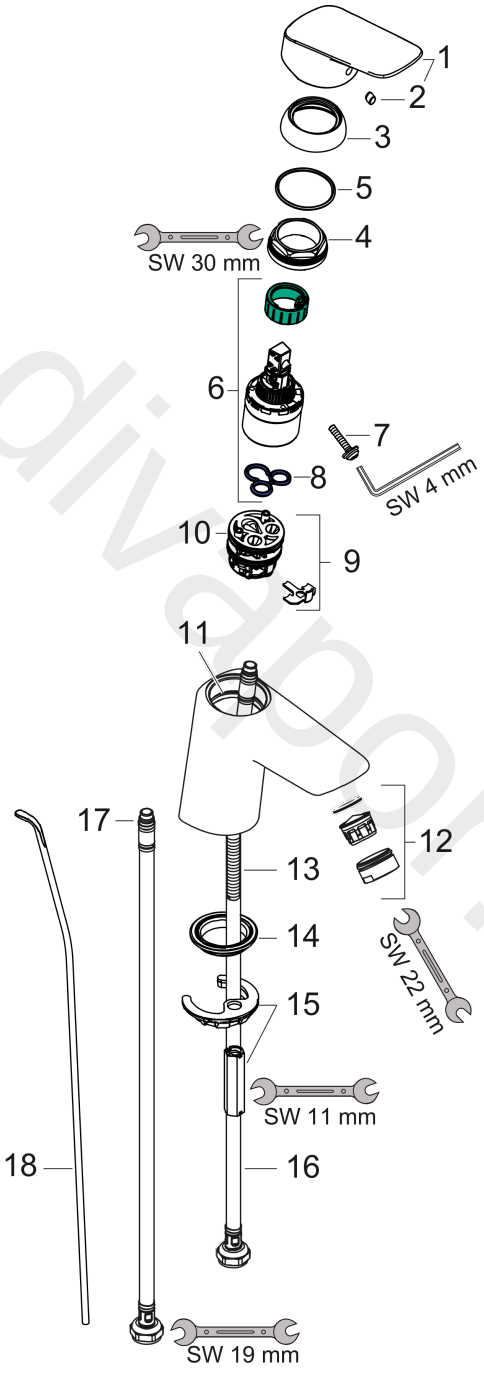

www.divaapar.com

Logis
Single lever basin mixer 70 LowFlow with pop-up waste set
Finish: **Chrome** Article Number: **71078000**

Spare part list

Year of production: **>05/17**

Pos.	Description	Article Number	Price	PU
1	handle	92224000	£ 51,00	1
2	screw cover	96338000	£ 3,30	1
3	flange	97406000	£ 20,50	1
4	nut	97209000	£ 16,10	1
5	O-Ring 32x2	98193000	£ 3,30	1
6	cartridge, assy	95646000	£ 96,00	1
7	locking screw for handle	95140000	£ 6,10	1
8	seal	95008000	£ 9,00	1
9	adapter for cartridge	98750000	£ 13,30	1
10	O-Ring 30x2	98186000	£ 3,30	1
11	O-ring 35x2	92604000	£ 6,10	1
12	aerator M24x1 (3,5 l/min)	92508000	£ 20,50	1
13	screw M8 x 68	97736000	£ 6,10	1
14	seal Ø 42	98722000	£ 6,10	1
15	fixing set	96016000	£ 35,00	1
16	connection hose 450 mm M8x0,75 G3/8	97206000	£ 35,00	1
17	O-ring 6,6x1,6	93019000	£ 3,30	1
18	pull rod	96657000	£ 13,30	1
a	pop up waste	92168000	£ 43,00	1

www.divapor.com