inta

technical data sheet

thermostatic mixing valves -
Intamix Low Pressure Under Bath Thermostatic Mixing Valve

provides a **high** volume of water at **stable** temperatures with **thermostatic** protection

Introduction

The Intamix low pressure under bath mixing valve is designed primarily for bath applications to meet the requirements of Building Regulations Part G. The new regulations state the temperature of water to a bath should be limited to no more 48°C. This allows for heat loss in metal baths. A comfortable bathing temperature is around 37°C.
In order to comply with this legislation the Intamix low pressure under bath mixing valve complies with the requirements of TMV2. Delivering safe blended hot water with high flow rates. The Intamix low pressure thermostatic mixing valve is the ideal solution to the requirements of Building Regulations Part G.

Features

- Thermostatic protection
- Single piece thermostatic cartridge construction
- Automatic shut off in the event of hot or cold water failure
- High flow rate, low pressure drops
- Adjustable outlet temperature
- Temperature stability ± 2°C
- 22mm compression connections with integral check valves and filters
- TMV2 approved
- WRAS Approved

Product Range

Description	Code
intamix low pressure under bath thermostatic mixing valve	60007CP

www.divapoint.com

thermostatic mixing valves -
Intamix Low Pressure Under Bath Thermostatic Mixing Valve

Technical Specification

Max Inlet Pressure	14 Bar (static)
Min Inlet Pressure (dynamic)	0.2 Bar
Max Inlet Temperature	85°C
Max Inlet Pressure Differential	2:1
Outlet Temperature Adjustment	30°C - 65°C
Min Temperature differential to achieve hot or cold failsafe	10°C

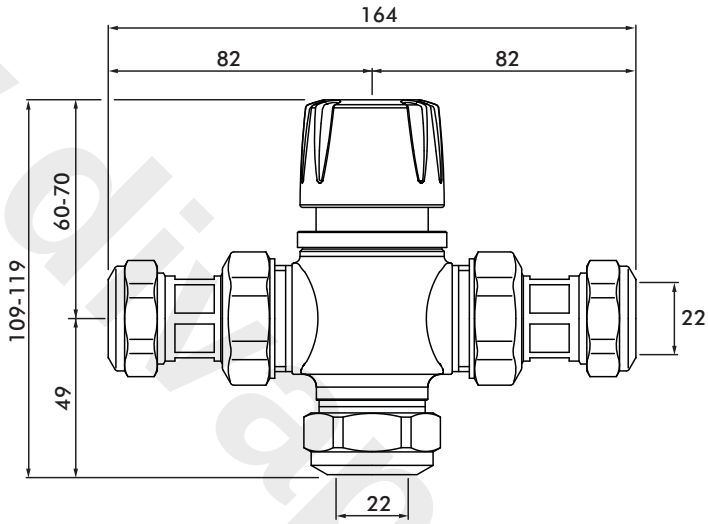

Flow Rate

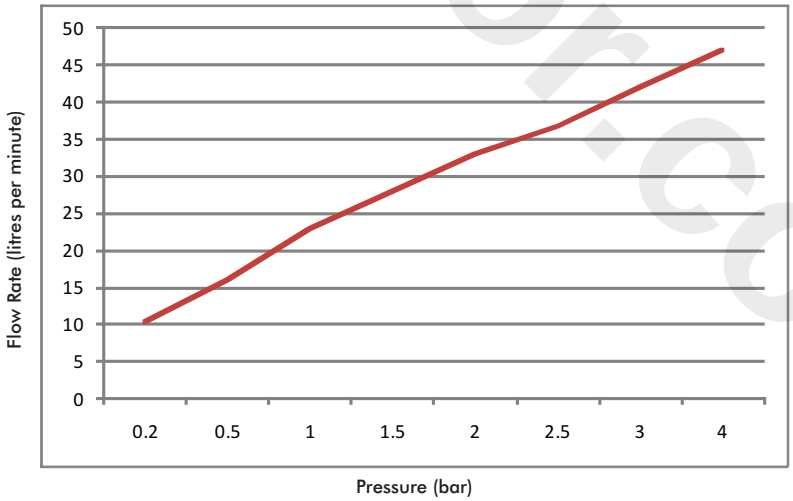

www.divapor.com

AIRFIELD INDUSTRIAL ESTATE, HIXON, STAFFORD, ST18 0PF
T. 01889 272180 F. 01889 272181 E. SALES@INTATEC.CO.UK
WWW.INTATEC.CO.UK | WWW.ANTISCALD.CO.UK

E&OE
07/2011