AXOR

AXOR Edge
Single lever bath mixer for concealed installation
Finish: **Chrome** Article Number: **46450000**

product features

- 2 functions
- flow rate upper outlet: 20 l/min
- flow rate lower outlet: 28 l/min
- maximum flow rate at 3 bar: 28 l/min
- ceramic cartridge
- temperature limitation adjustable
- diverter with automatic resetting
- with silencer
- suitable for continous flow water heaters
- connection type: basic set
- wall-mounted
- min. operating pressure: 1 bar
- max. operating pressure: 10 bar
- WRAS 1907356

Article Details

Price excl. VAT	1.041,67 £

Product image

Scale drawing

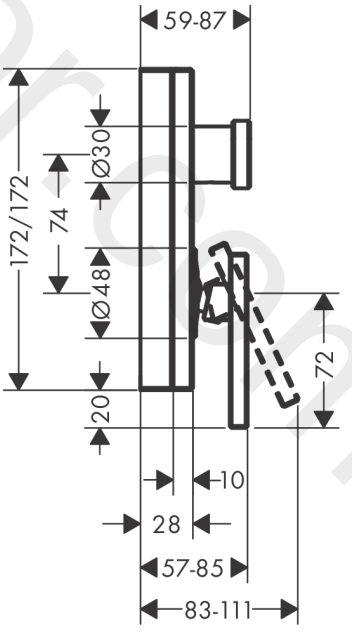

www.divapor.com

AXOR

AXOR Edge
Single lever bath mixer for concealed installation
Finish: **Chrome** Article Number: **46450000**

Flowchart

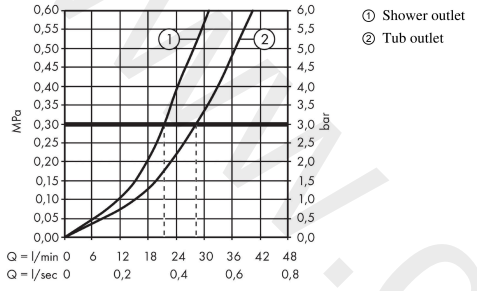

www.divapor.com

AXOR

AXOR Edge
Single lever bath mixer for concealed installation
Finish: **Chrome** Article Number: **46450000**

Exploded Drawing

Year of production: **>06/19**

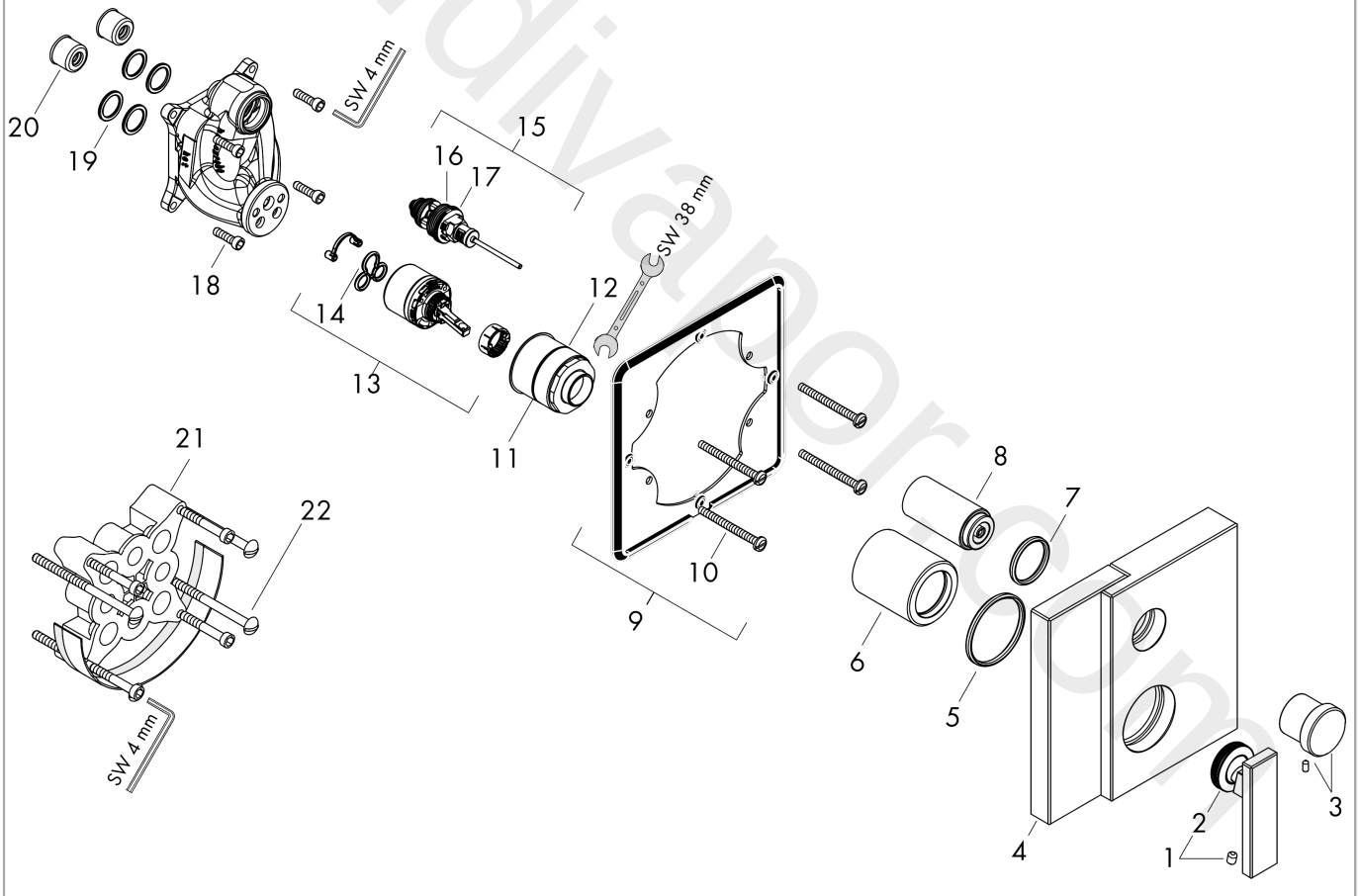

www.divanor.com

AXOR

AXOR Edge
Single lever bath mixer for concealed installation
Finish: **Chrome** Article Number: **46450000**

Spare part list

Year of production: **>06/19**

Pos.		Article Number	Price	PU
1	handle	93565000	£ 370,00	1
2	O-Ring 30x2	98186000	£ 3,30	1
3	diverter knob	93566000	£ 96,00	1
4	escutcheon 170 / 170 mm	93569000	£ 1.190,00	1
5	O-Ring 48x3	95508000	£ 3,30	1
6	O-ring 29x3	98371000	£ 6,10	1
7	sleeve	93581000	£ 137,00	1
8	sleeve	93580000	£ 224,00	1
9	sub plate	93604000	£ 96,00	1
10	set of fixing screws	96454000	£ 9,00	1
11	nut	93564000	£ 79,00	1
12	O-ring 39x1,5	98400000	£ 3,30	1
13	cartridge, assy	93185000	£ 137,00	1
14	seal	95008000	£ 9,00	1
15	selector	92745000	£ 64,00	1
16	O-ring 20x2,5	92602000	£ 6,10	1
17	O-ring 17x2	98199000	£ 3,30	1
18	set of screws	96525000	£ 9,00	1
19	O-ring 16x2	98133000	£ 3,30	1
20	noise reduction	94073000	£ 25,00	1
21	extension 25 mm	13595000	£ 75,00	1
22	set of fixing screws	97747000	£ 3,30	1

www.divapart.com