AXOR

AXOR Citterio
Single lever kitchen mixer 260 with swivel spout
Surfaces: Article Number: **39850800**

Exploded Drawing

Year of production: **07/06 - 09/10**

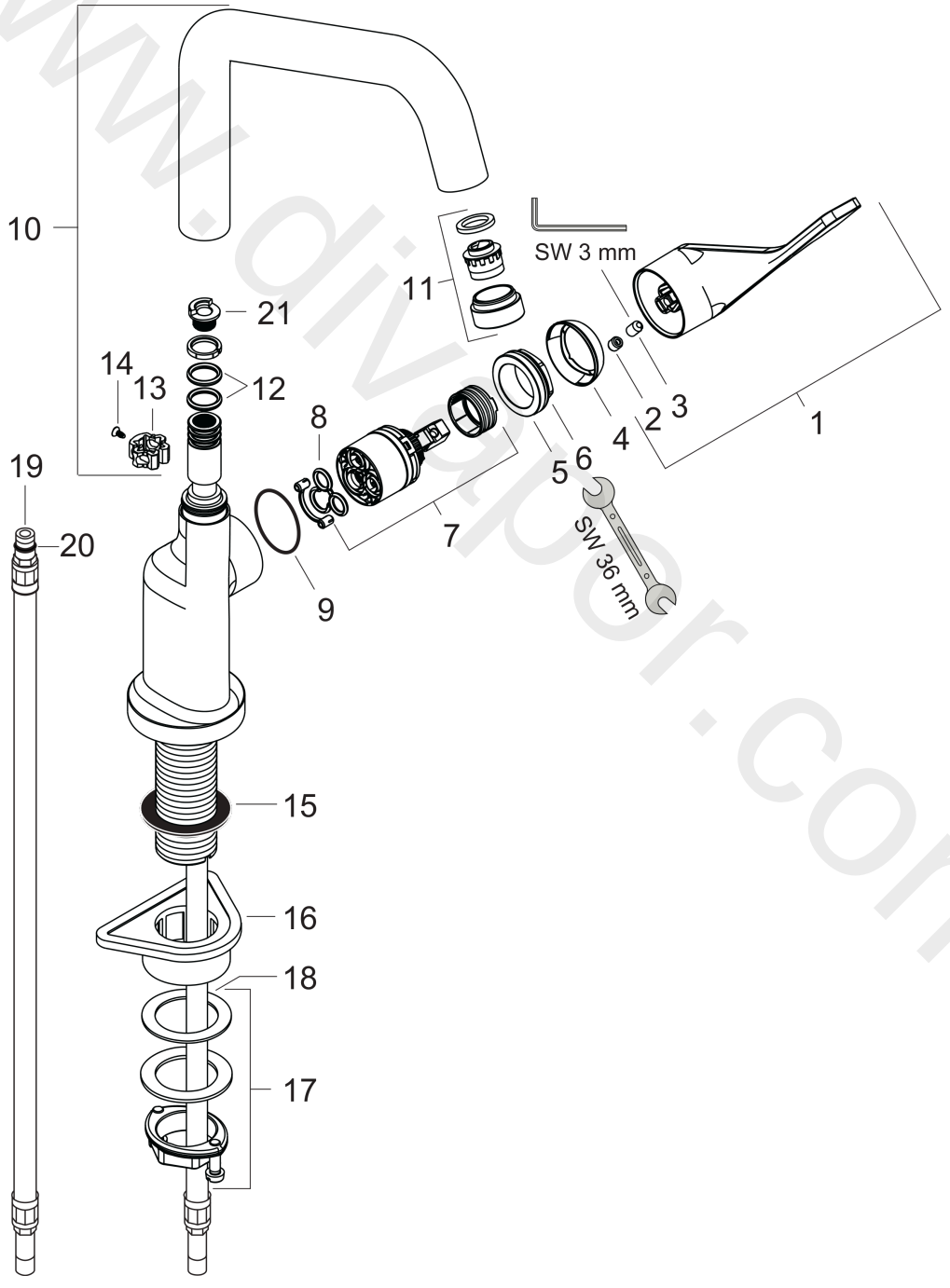

www.diverper.com

AXOR

AXOR Citterio
Single lever kitchen mixer 260 with swivel spout
Surfaces: Article Number: **39850800**

Spare part list

Year of production: **07/06 - 09/10**

Pos.		Article Number	Price	PU
1	handle	39891800	£ 173,00	1
2	screw cover	96338000	£ 3,30	1
3	hollow set screw M6x10 DIN 916	96029000	£ 3,30	1
4	flange	98603800	£ 43,00	1
5	nut	96461000	£ 35,00	1
6	O-Ring 32x2	98193000	£ 3,30	1
7	cartridge, assy	92730000	£ 35,00	1
8	seal	95008000	£ 9,00	1
9	O-ring 35x2	92604000	£ 6,10	1
10	spout cpl.	98604800	£ 224,00	1
11	aerator M24x1 (15 l/min)	97691800	£ 64,00	1
12	sealing set	92646000	£ 20,50	1
13	axialring	97558000	£ 3,30	1
14	screw	97662000	£ 9,00	1
15	sealing washer	97825000	£ 3,30	1
16	support	97523000	£ 6,10	1
17	fixing set (Ø 34)	95049000	£ 16,10	1
18	lever collar	97548000	£ 3,30	1
19	connection hose 900 mm M8x0,75 G3/8	96316000	£ 43,00	1
20	O-ring 7x1,5	98422000	£ 3,30	1
21	set of locating rings (110° / 150°)	98486000	£ 16,10	1

www.divapart.com