AXOR

AXOR Uno
Pillar tap 70 without waste set
Finish: **Brushed Nickel** Article Number: **38130820**

product features

- ComfortZone 70
- projection: 100 mm
- spout height: 65 mm
- spray type: normal spray
- maximum flow rate at 3 bar: 5 l/min
- ceramic valve 180°
- for cold water connection
- connection type: copper pipe connections
- connection dimension: DN15

Article Details

Price excl. VAT	368,70 £

Technology

Product image

Scale drawing

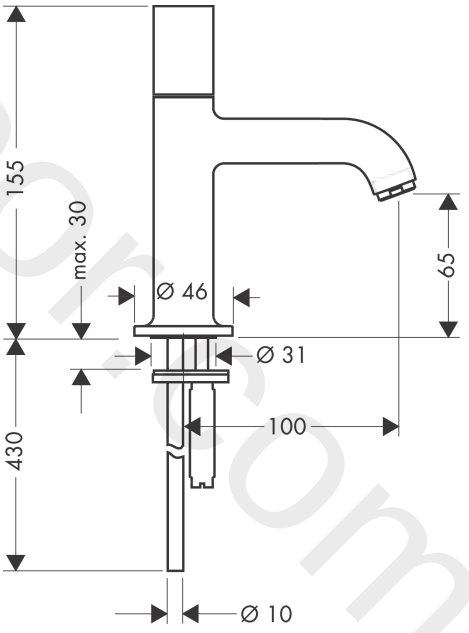

www.diwapor.com

AXOR

AXOR Uno
Pillar tap 70 without waste set
Finish: **Brushed Nickel** Article Number: **38130820**

Flowchart

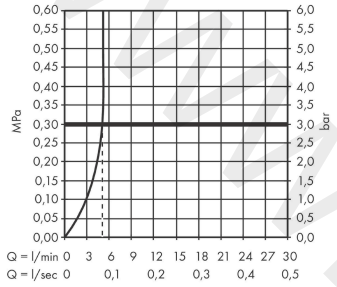

www.divapor.com

AXOR

AXOR Uno
Pillar tap 70 without waste set
Finish: **Brushed Nickel** Article Number: **38130820**

Exploded Drawing

Year of production: **>04/17**

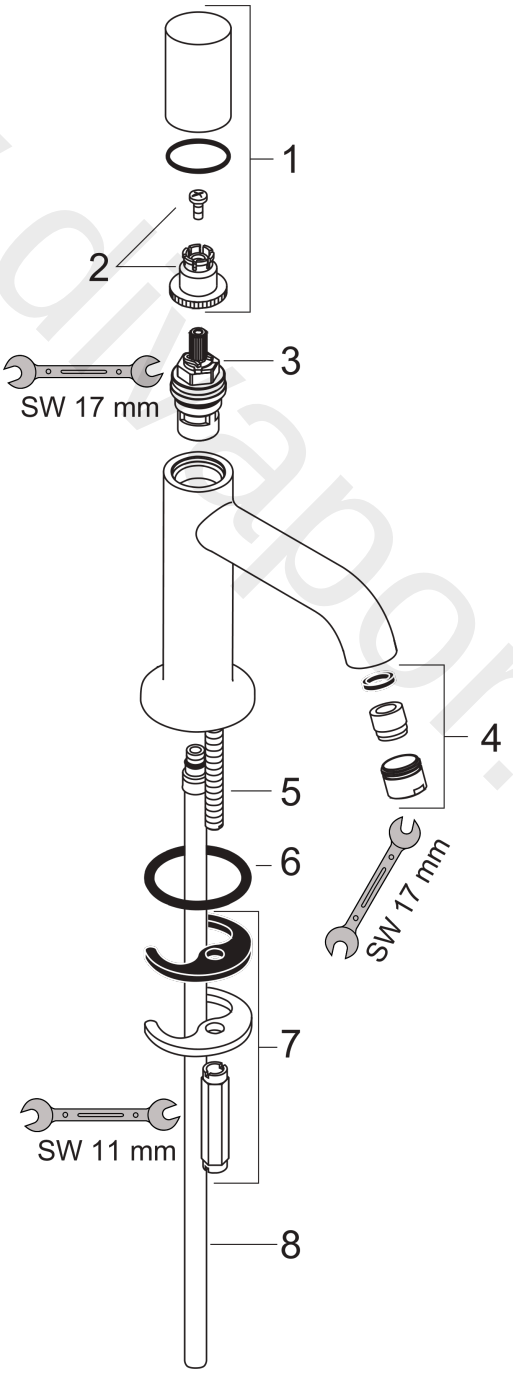

www.diyapor.com

AXOR

AXOR Uno
Pillar tap 70 without waste set
Finish: **Brushed Nickel** Article Number: **38130820**

Spare part list

Year of production: **>04/17**

Pos.		Article Number	Price	PU
1	handle	96318820	-	1
2	handle fixing set	94184000	£ 6,10	1
3	shut off unit	94149000	£ 35,00	1
4	aerator M18x1 (5 l/min)	95384820	-	1
5	screw M8 x 68	97736000	£ 6,10	1
6	O-ring 37x3	98476000	£ 3,30	1
7	fixing set	96016000	£ 35,00	1
8	supply pipe 490 mm	96786000	£ 64,00	1

www.divapor.com