AXOR

AXOR Uno
Single lever basin mixer for concealed installation wall-mounted with loop handle and spout 165 mm
Finish: **Chrome** Article Number: **38121000**

product features

- consists of: single lever basin mixer for concealed installation wall-mounted, waste set
- projection: 165 mm
- handle variant: flat handle
- spray type: normal spray
- maximum flow rate at 3 bar: 5 l/min
- ceramic cartridge
- temperature limitation adjustable
- suitable for continuous flow water heaters
- non-closing waste set
- connection type: basic set
- connection dimension: DN15
- handle can be positioned on the right or left, depending on the basic set installation
- EU taxonomy: max. 6 l/min - Substantial Contribution (SC)
- WRAS 1906018

Article Details

Price excl. VAT	487,50 £

Technology

AirPower

EcoSmart

Product image

Scale drawing

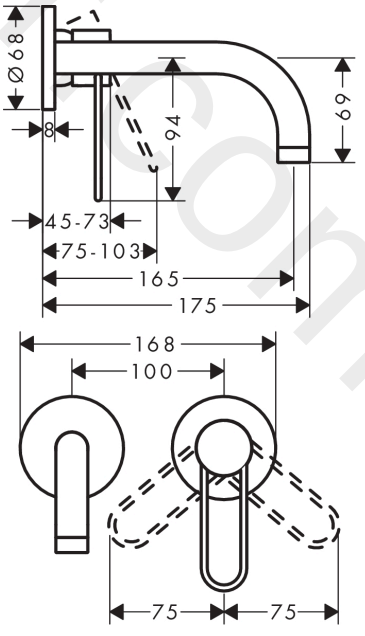

www.divapoint.com

AXOR

AXOR Uno
Single lever basin mixer for concealed installation wall-mounted with loop handle and spout 165 mm
Finish: **Chrome** Article Number: **38121000**

Flowchart

① With flow limiter
② Without flow limiter

www.divapor.com

AXOR

AXOR Uno
Single lever basin mixer for concealed installation wall-mounted with loop handle and spout 165 mm
Finish: **Chrome** Article Number: **38121000**

Exploded Drawing

Year of production: **>04/17**

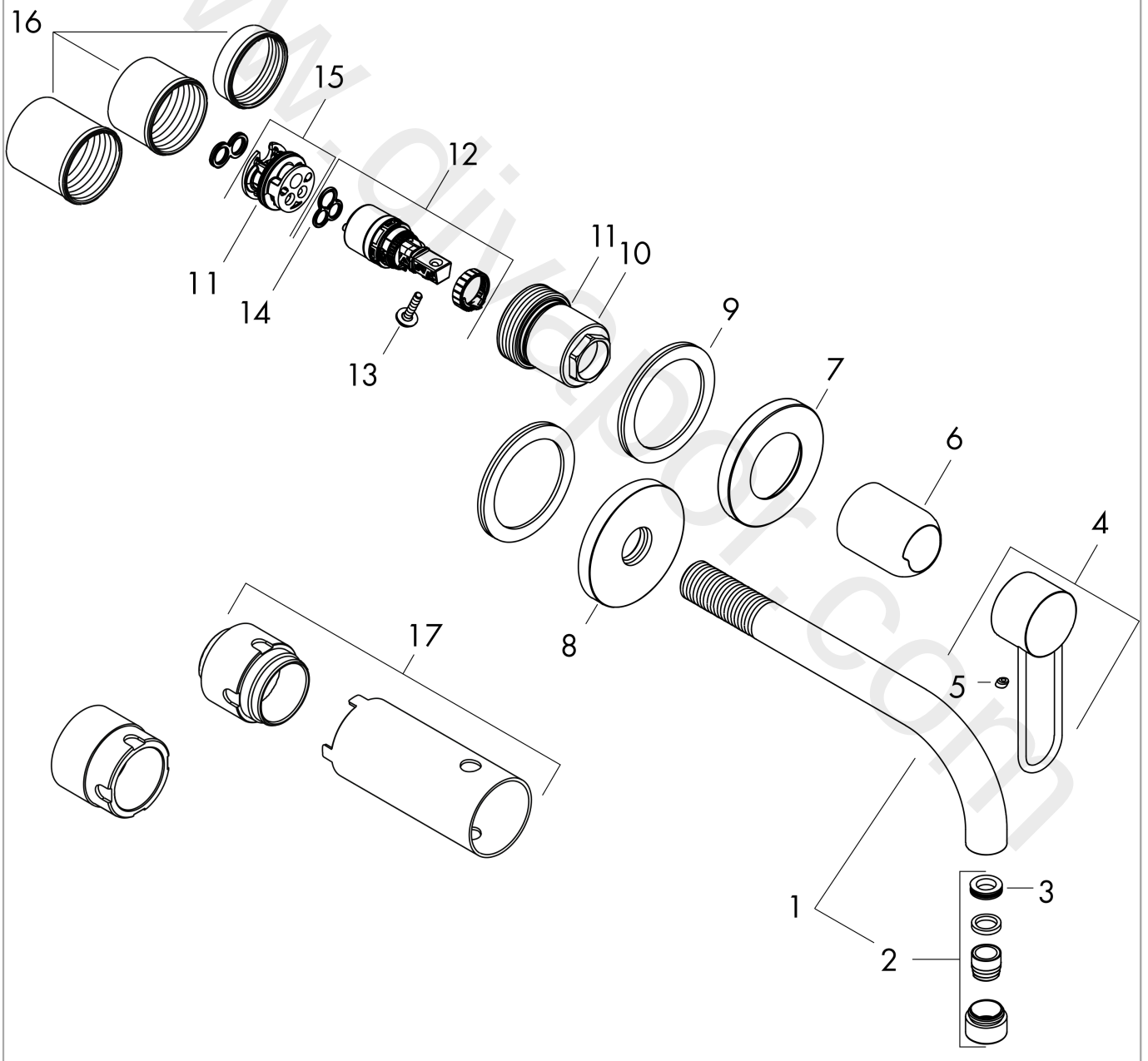

www.diyspot.com

AXOR

AXOR Uno
Single lever basin mixer for concealed installation wall-mounted with loop handle and spout 165 mm
Finish: **Chrome** Article Number: **38121000**

Spare part list

Year of production: **>04/17**

Pos.		Article Number	Price	PU
1	spout 160 mm	97369000	£ 173,00	1
2	aerator M18x1 (5 l/min)	95387000	£ 43,00	1
3	O-ring 13x1,5	98475000	£ 3,30	1
4	handle	93054000	£ 64,00	1
5	screw cover	96338000	£ 3,30	1
6	sleeve	93053000	£ 43,00	1
7	escutcheon Ø 68 mm	93052000	£ 35,00	1
8	escutcheon for spout	96910000	£ 79,00	1
9	washer	97600000	£ 13,30	1
10	nut	93141000	£ 43,00	1
11	O-ring 26x2	98147000	£ 3,30	1
12	cartridge, assy	97685000	£ 64,00	1
13	locking screw for handle	95140000	£ 6,10	1
14	seal	98865000	£ 35,00	1
15	adapter for cartridge	95634000	£ 13,30	1
16	fixing set	97971000	£ 43,00	1
17	extension set 25 mm for 13622180	31971000	£ 169,00	1
a	waste	50001000	£ 71,00	1
b	adapter for exchanged connections	93819000	£ 173,00	1

www.divapart.com