Sink - VAIA

Wall-mounted three-hole lavatory mixer without drain - Chrome

Article number: 36 712 809-00 0010

Date of manufacture from 3/13/2017

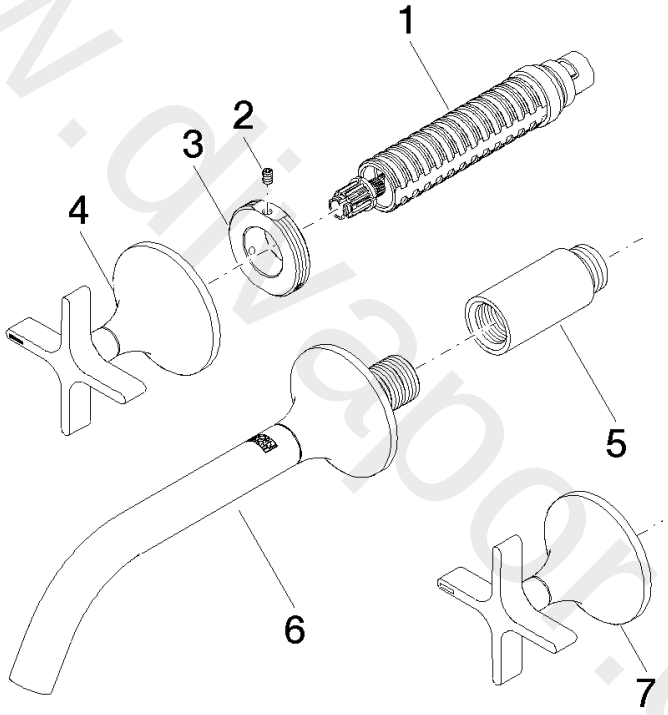

www.divapoor.com

Sink - VAIA

Wall-mounted three-hole lavatory mixer without drain - Chrome

Article number: 36 712 809-00 0010

Date of manufacture from 3/13/2017

Spare parts list

Position	Number of units	Item Number	Spare part	Lead time
1	2	90 90 03 157 00 90	top	2
2	2	09 31 11 008 90	pin	2
3	2	09 21 02 163 90	disc	2
4	1	90 20 80 011 00-00	handle (hot)	10
5	1	09 24 03 081 10 90	extension	2
6	1	13 800 809-00 0010	Lavatory spout, wall-mounted without drain - Chrome	10
7	1	90 20 80 010 00-00	handle (cold)	10

www.divapor.com