Wall valve clockwise closing 1/2"

VAIA

36 607 819

- rosette Ø 60 mm
- head part with cut-to-length spindle and sleeve

Platinum	36 607 819-08
Chrome	36 607 819-00
Brushed Platinum	36 607 819-06
Dark Chrome	36 607 819-19
Brushed Durabrass (23kt Gold)	36 607 819-28
Brushed Champagne (22kt Gold)	36 607 819-46
Champagne (22kt Gold)	36 607 819-47
Brushed Dark Platinum	36 607 819-99

Required miscellaneous

Wall valve 1/2" 35 607 970 90
- min. recess depth 75 mm
- max. recess depth 145 mm

www.divapor.com

Wall valve clockwise closing 1/2"

VAIA

36 607 819

mm [inches]

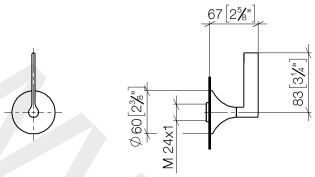

www.divapor.com

Wall valve clockwise closing 1/2"

VAIA

36 607 819

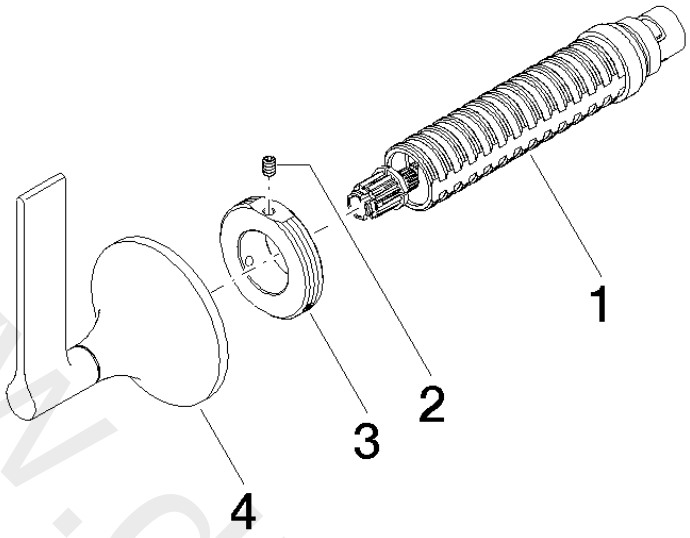

Spare parts list

No.	Item Number	Name	Quantity used	Delivery time
1	90 90 03 143 00 90	top	1	2
2	09 31 11 008 90	pin	1	2
3	09 21 02 163 90	disc	1	2
4	90 20 80 015 00-08	handle	1	-

www.divapor.com