Wall valve clockwise closing 1/2"

MEM

36 607 782

- rosette 60 x 60 mm
- head part with cut-to-length spindle and sleeve

Brushed Platinum	36 607 782-06
Chrome	36 607 782-00
Platinum	36 607 782-08
Dark Chrome	36 607 782-19
Brushed Durabrass (23kt Gold)	36 607 782-28
Brushed Champagne (22kt Gold)	36 607 782-46
Champagne (22kt Gold)	36 607 782-47
Brushed Chrome	36 607 782-93
Brushed Dark Platinum	36 607 782-99

Required miscellaneous

Wall valve 1/2" 35 607 970 90
- min. recess depth 105 mm
- max. recess depth 150 mm

www.divapor.com

Wall valve clockwise closing 1/2"

MEM

36 607 782

mm [inches]

www.divapor.com

Wall valve clockwise closing 1/2"

MEM

36 607 782

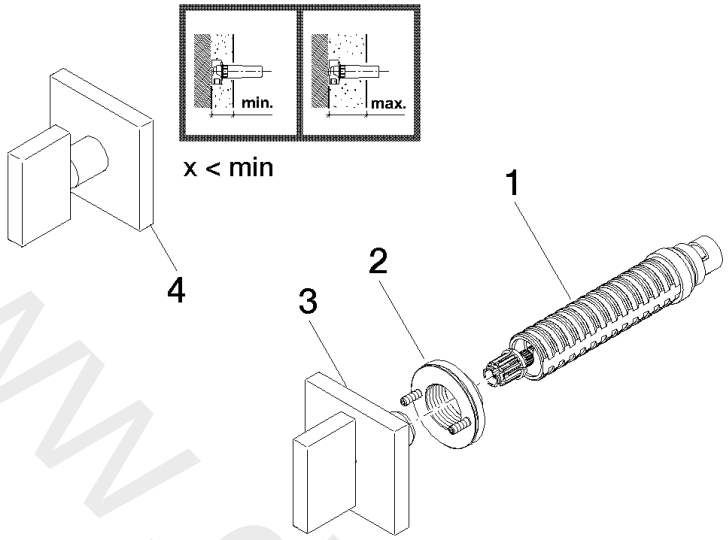

Spare parts list

No.	Item Number	Name	Quantity used	Delivery time
1	90 90 03 143 00 90	top	1	2
2	90 21 02 108 00 90	disc	1	2
3	90 20 78 002 02-06	handle	1	10
4	04 20 78 002 01-06	handle	1	10

www.divapor.com