Shower - CL.1
Concealed three-way diverter
Article number: 36 212 705-06

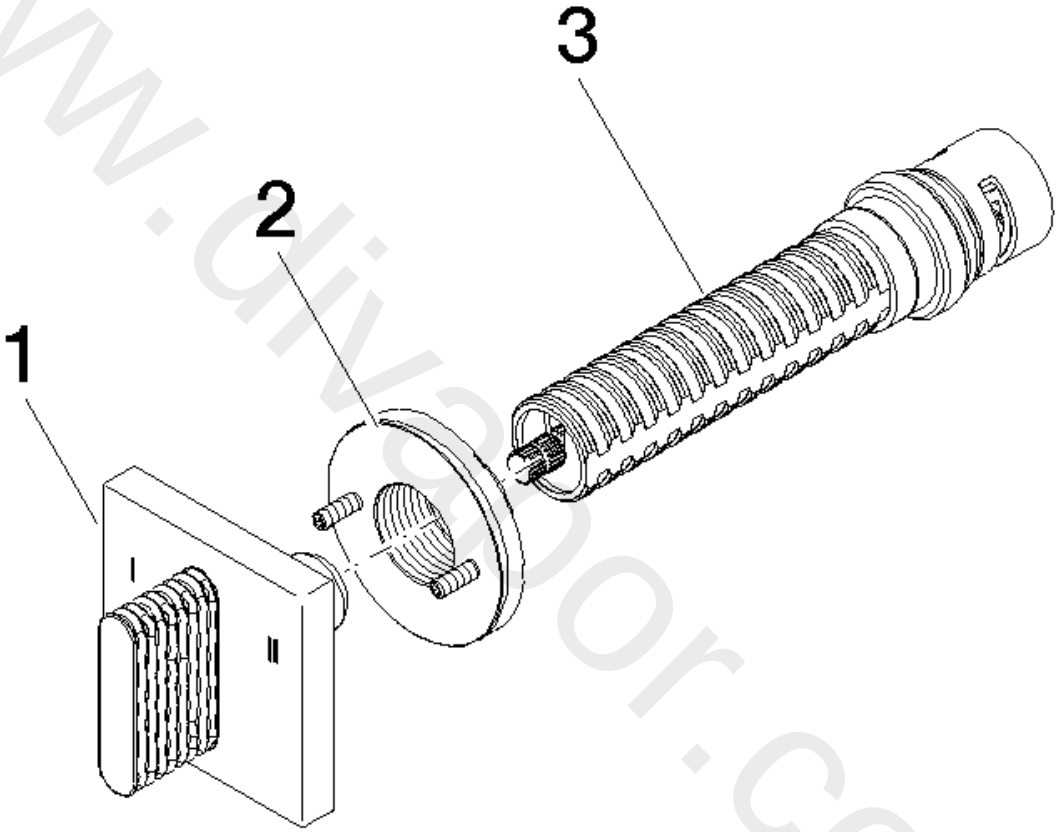

www.divador.com

Spare parts list

Position	Quantity used	Item Number	Spare part	Delivery time
1	1	90 20 70 053 10-06	handle	10
2	1	90 21 02 181 00 90	disc	2
3	1	90 90 03 303 10 90	diverter	2

Shower - CL.1
Concealed three-way diverter
Article number: 36 212 705-06

www.divapor.com