Technovation X300

Deck Diverter

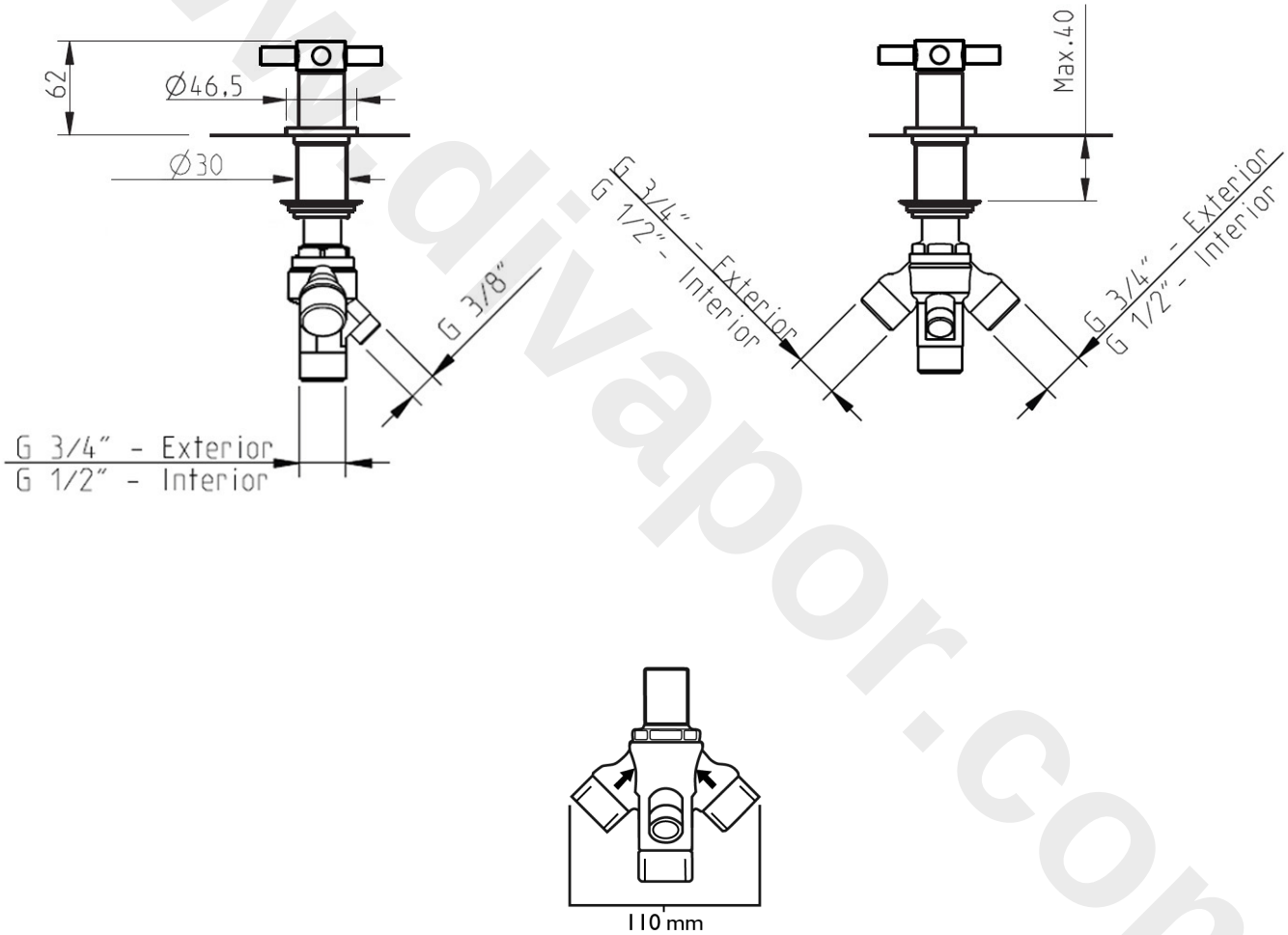

www.divapor.com

CIFIAL

www.cifial.co.uk
cifialuk@btconnect.com

dimensions mm

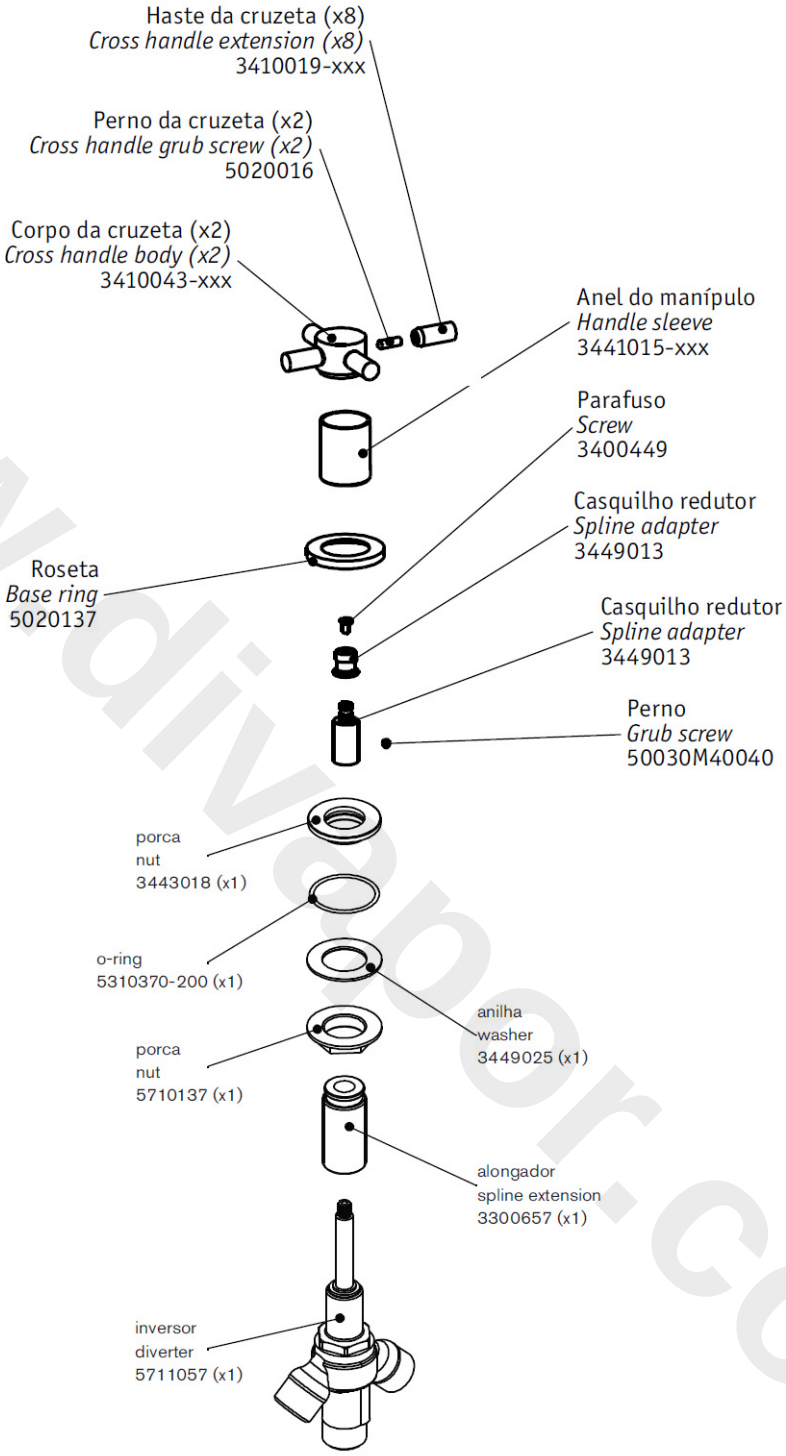

www.divapor.com