Code: 32401HM

technical specifications

HEXA

Tall mono basin mixer

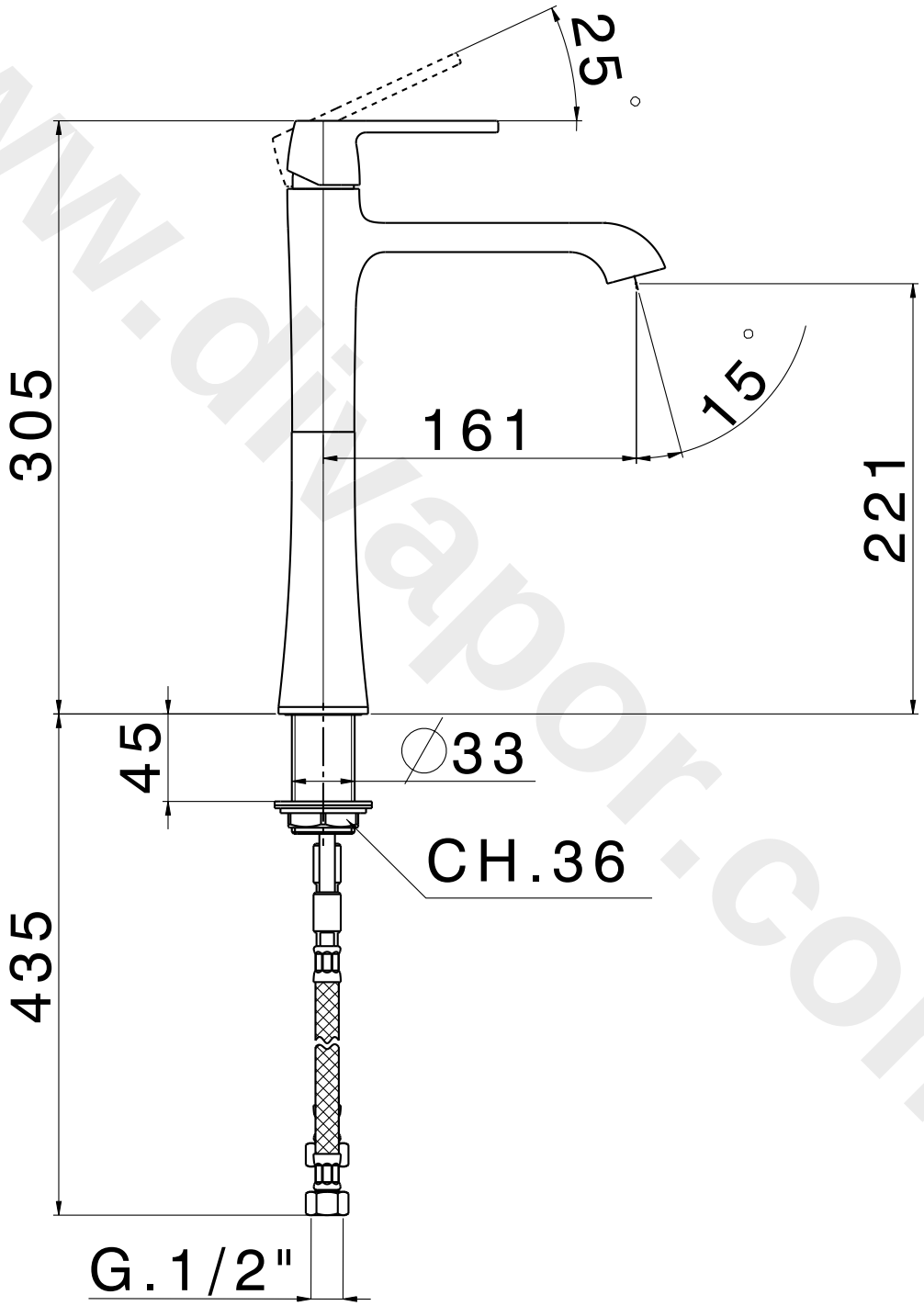

www.divapor.com

CIFIAL

www.cifial.co.uk
cifialuk@btconnect.com

dimensions mm

Code: 32401HM

technical specifications

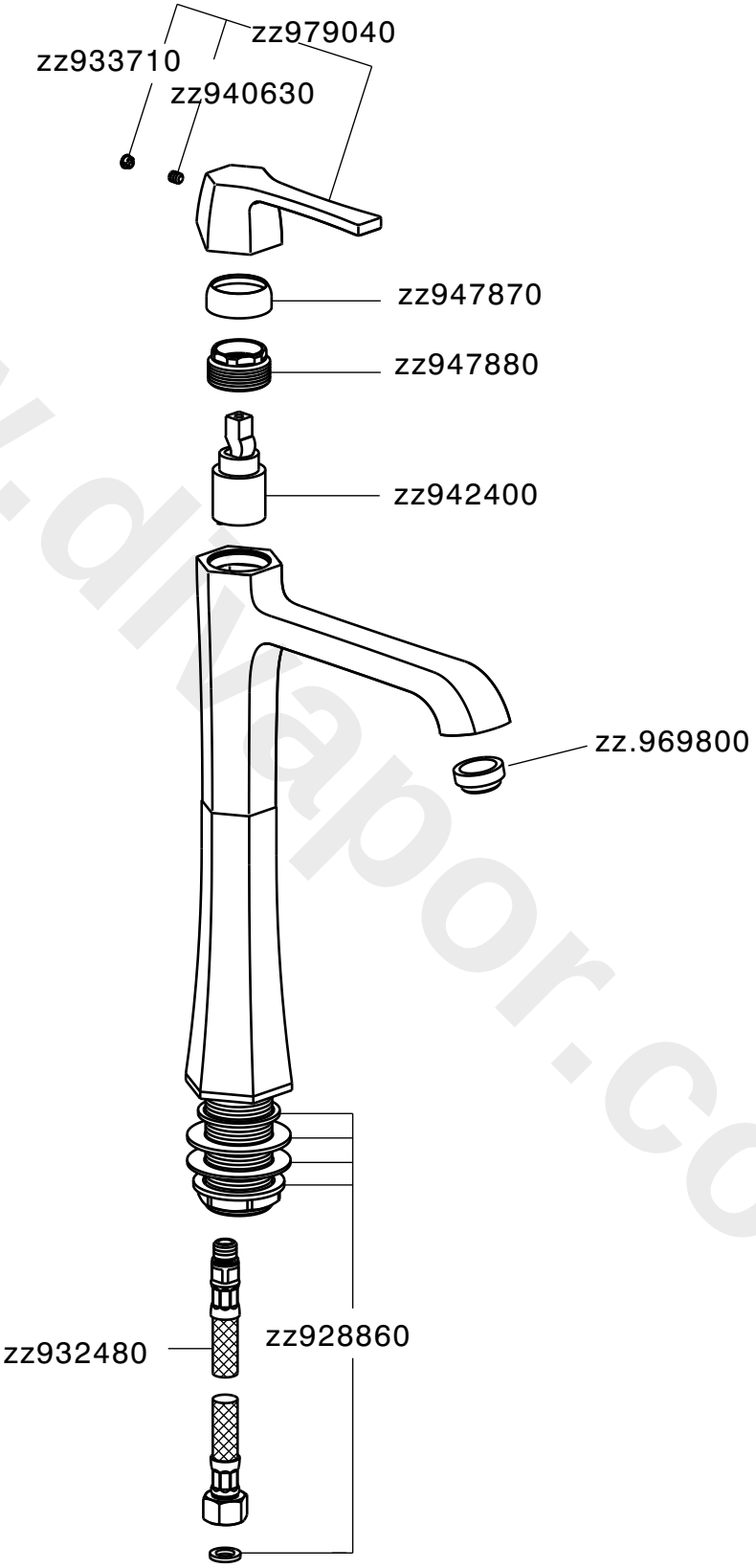

www.dlvapor.com

CIFIAL

www.cifial.co.uk
cifialuk@btconnect.com

dimensions mm