# HEXA

**Mono basin mixer**

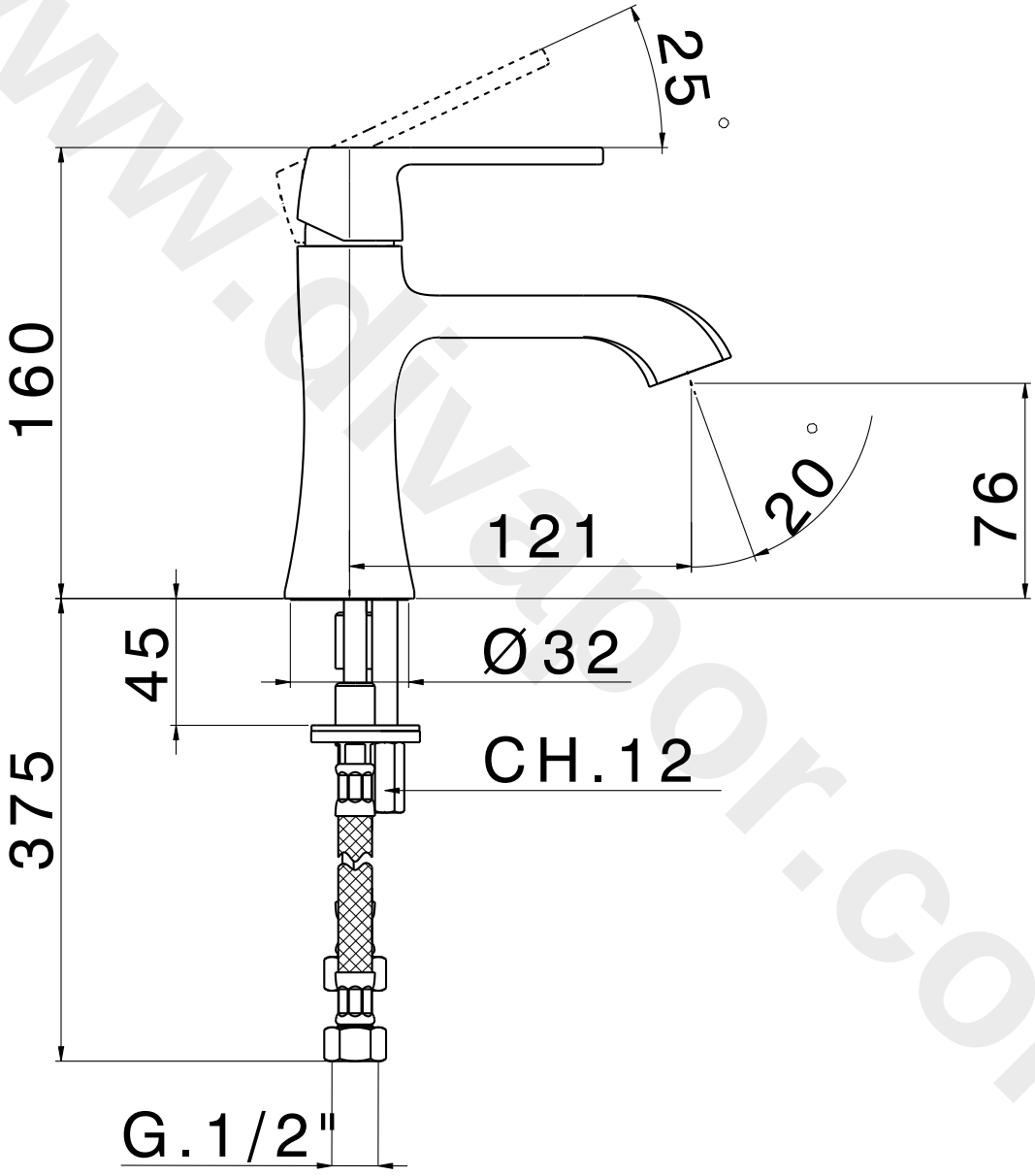


www.divapor.com

CIFIAL

**www.cifial.co.uk**
**cifialuk@btconnect.com**

**dimensions mm**

# Code: 32400HM

*technical specifications*

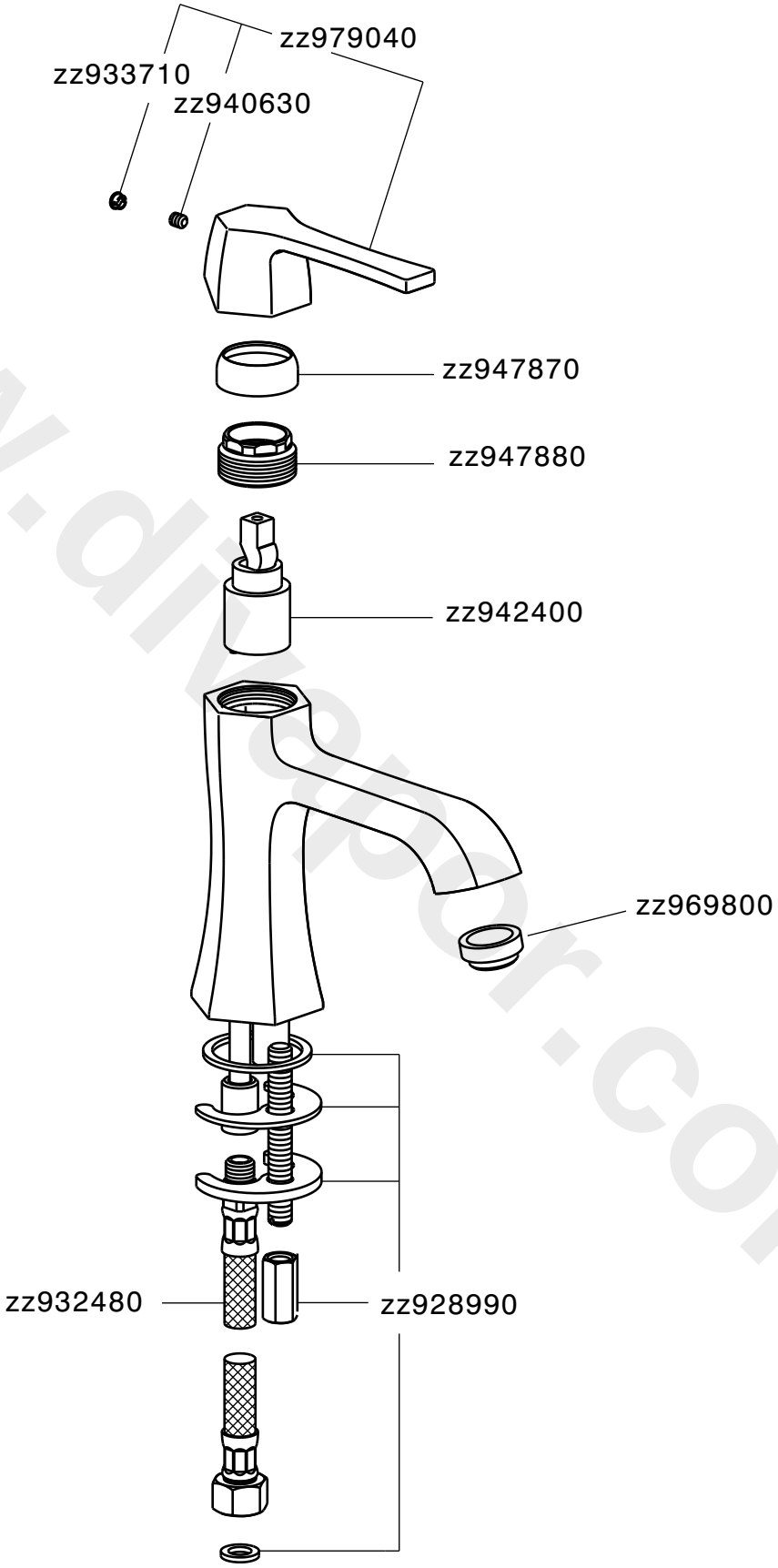


www.diverpor.com

CIFIAL

**www.cifial.co.uk**
**cifialuk@btconnect.com**

**dimensions mm**